OLYMPIA®

PIONEER®

CENTRAL BRASS®

PIONEER FAUCETS

2023 PRICE CATALOG

RESIDENTIAL | COMMERCIAL

FAUCETS & FIXTURES

Style that Works

TO OUR VALUED CUSTOMER

The Pioneer family of brands has provided top-quality faucets and fixtures to builders, contractors and designers for over three decades. Each of our brands – Pioneer, Olympia and Central Brass – are uniquely designed to meet the needs of their respective markets, while consistently delivering on the Pioneer promise of excellence and reliability. All of our products are nationally distributed with warehouses in Los Angeles, California, and Columbus, Ohio.

Every Pioneer product is assembled, tested and inspected at our state-of-the-art manufacturing facility. Rigorous quality control measures ensure that each faucet meets our uncompromising standards, as well as all pertinent codes and regulations. Unparalleled reliability and outstanding value, combined with excellent customer service, are why Pioneer products have become the primary choice of some of the nation's most respected builders and contractors.

From your initial quote to after-sale service and support, we will give you our best and we won't stop until you're satisfied.

We thank you for your continued loyalty.

HOW TO ORDER

Simply email or fax your order, or call our customer service line.

PIONEER

Customer Service Hotline: 800.338.9468

Fax Order Number: 323.888.9515

Email: sales@pioneerind.com

OLYMPIA

Customer Service Hotline: 888.772.7701

Fax Order Number: 323.888.9515

Email: sales@olympiafaucets.com

CENTRAL BRASS

Customer Service Hotline: 800.321.8630

Fax Order Number: 323.888.9515

Email: sales@centralbrass.com

HOW TO USE THIS CATALOG

Use these icons to identify key features of our products.

Product is compliant with Federal safe drinking water legislation and state level legislation, including AB1953, S152 and HB372.

Products displaying the ADA logo comply with applicable requirements specified in the Americans Disability Act.

All Pioneer products are compliant with the Buy America Act.

Product meets Cal Green flow standards: Bathroom faucets with a 1.5 GPM rating and kitchen faucets with a 1.8 GPM or less.

Indicates products that are WaterSense Certified.

IAPMO Listed
File# 3778

IAPMO Listed
File# N-5814

IAPMO Listed
File# 6260

IAPMO Listed
File# 6060

RESIDENTIAL

PIONEER

RESIDENTIAL

OLYMPIA

COMMERCIAL

CENTRAL BRASS

CONTENTS

PRICE INDEX

PIONEER 10

OLYMPIA 16

CENTRAL BRASS 24

PIONEER

MOD

BATHROOM

Single Handle Bathroom Faucets 32

Two Handle Bathroom Faucets 33

TUB & SHOWER

Single Handle Tub and Shower Trim Sets 34

Handheld Shower Sets 36

Two Handle Roman Tub Trim Sets 36

BATHROOM HARDWARE 37

MOTEGI

KITCHEN

Single Handle Pull-Down Kitchen Faucets 38

Single Handle Kitchen Faucets 39

Pot Fillers 39

BATHROOM

Single Handle Bathroom Faucets 40

Two Handle Bathroom Faucets 41

TUB & SHOWER

Tub & Shower Trim Sets 42

Handheld Shower Sets 46

Two Handle Roman Tub Sets 46

Single Handle Roman Tub Sets 47

Single Handle Floor Mount Roman Tub Sets 47

BATHROOM HARDWARE 48

PREMIUM

KITCHEN

Two Handle Wall Mount Faucets 49

LEGACY

KITCHEN

Single Handle Kitchen Faucets 50

Single Handle Pull-Down Kitchen Faucets 51

Two Handle Kitchen Faucets 51

BATHROOM

Single Handle Bathroom Faucets 52

Two Handle Bathroom Faucets 53

TUB & SHOWER

Tub & Shower Trim Sets 54

DEL MAR

KITCHEN

Two Handle Kitchen Faucets 56

BATHROOM

Two Handle Bathroom Faucets 57

TUB & SHOWER

Tub & Shower Trim Sets 58

Handheld Shower Sets 59

Two Handle Roman Tub Trim Sets 59

AMERICANA

KITCHEN

Two Handle Kitchen Faucets 60

Pot Fillers 60

BATHROOM

Two Handle Bathroom Widespread Faucets 61

TUB & SHOWER

Tub & Shower Trim Sets 62

BRENTWOOD

BATHROOM

Two Handle Bathroom Faucets 63

VALVES

Pressure Balance Valves 64

Tub Valves 69

ACCESSORIES

Showerheads 70

LuxFlow Showerheads 72

Drains: Waste & Overflow 73

Miscellaneous 75

PARTS

Ceramic Disc Cartridges 76

Ceramic Stems & Washerless Cartridges 78

Diverter Pistons, Pressure Balance Spools & Associated Cartridge Parts 79

Extensions & Adapters 80

Parts List 81

TERMS & CONDITIONS 85

Pioneer showerheads feature aerators that meet ANSI/ASME A112.18.1 flow requirements of 1.75 GPM.
Pioneer faucets feature aerators that meet ANSI/ASME A112.18.1 flow requirements of 1.5 GPM.
Low flow options available upon request.
Builder Tract Packs sold in case quantities only.
Special Order Finishes Available: Allow 10-12 weeks for delivery.

CONTENTS

OLYMPIA

I1

BATHROOM
Single Handle Bathroom Faucets 88

TUB & SHOWER
Pressure Balance Trim Sets 89

I2

KITCHEN
Single Handle Pull-Down Kitchen Faucets 91
Touchless Pull-Down Spray Head 91
Single Handle Pre-Rinse Spring Pull-Down Kitchen Faucets 92

BATHROOM
Single Handle Bathroom Faucets 93

TUB & SHOWER
Pressure Balance Trim Sets 95
Shower Columns 97
Handheld Shower Sets 98

I2v

BATHROOM
Single Handle Bathroom Faucets 99
Two Handle Bathroom Faucets 100

TUB & SHOWER
Pressure Balance Trim Sets 101
Roman Tub Trim Sets 103

I3

KITCHEN
Single Handle Pull-Down Kitchen Faucets 104

BATHROOM
Single Handle Bathroom Faucets 105

TUB & SHOWER
Pressure Balance Trim Sets 106
Single Handle Tub & Shower Trim Sets 108
Single Handle Tub Trim Sets 109

I4

BATHROOM
Single Handle Bathroom Faucets 110
Two Handle Bathroom Faucets 112

TUB & SHOWER
Pressure Balance Trim Sets 113

ACCENT

KITCHEN
Single Handle Kitchen Faucets 115
Single Handle Pre-Rinse Spring Pull-Down Kitchen Faucets 115
Two Handle Kitchen Faucets 116

BAR
Two Handle Bar Faucets 117

BATHROOM
Two Handle Bathroom Faucets 118

TUB & SHOWER
Pressure Balance Trim Sets 121
Two & Three Handle Tub & Shower Sets 124
Handheld Shower Sets 125
Roman Tub Trim Sets 126

ELITE

KITCHEN
Single Handle Pullout Kitchen Faucets 127
Single Handle Kitchen Faucets 128
Two Handle Kitchen Faucets 129

BAR
Two Handle Bar Faucets 131

BATHROOM
Single Handle Bathroom Faucets 132
Two Handle Bathroom Faucets 135

TUB & SHOWER
Pressure Balance Trim Sets 137
Single Handle Tub & Shower Sets 140
Two & Three Handle Tub & Shower Sets 141

VALVES

Pressure Balance Valves 144
Roman Tub Set Valves 150
Single Handle Diverter Valves 150

ACCESSORIES

Showerheads 151
Tub Spouts 153
Drains: Waste & Overflow 155
Bathroom Drains 157
Strainers 159
Miscellaneous 160
Aerators 161

PARTS

Ceramic Cartridges & Associated Cartridge Parts 162
Parts List 167

TERMS & CONDITIONS 171

Olympia showerheads feature aerators that meet ANSI/ASME A112.18.1 flow requirements of 1.75 GPM.
Olympia faucets feature aerators that meet ANSI/ASME A112.18.1 flow requirements of 1.5 GPM.
Low flow options available upon request.
Builder Tract Packs sold in case quantities only.
Special Order Finishes Available: Allow 10-12 weeks for delivery.

CONTENTS

CENTRAL BRASS

KITCHEN

Pre-Rinse Faucets 174
Pre-Rinse Faucet Accessories 177
Single Handle Kitchen Faucets 178
Two Handle Kitchen Faucets 178
Wall Mount/Ledge Kitchen Faucets 182
Pot Fillers 187

SERVICE SINKS

Service Sink Faucets 188
Service Sink Accessories 189

LABORATORY

Laboratory Faucets 190

BAR & LAUNDRY

Glass Fillers 191
Single Handle Bar Faucets 192
Two Handle Bar & Laundry Faucets 194
Two Handle Laundry Faucets 197

WORKBOARD

Workboard Sink Faucets 199

BATHROOM

Single Handle Bathroom Faucets 200
Two Handle Bathroom Faucets 201
Single Handle Basic Bathroom Faucets 204
Electronic Sensor Faucets 205

TUB & SHOWER

Tub & Shower Trim Sets 206
Tub & Shower Specialty Products 212
Tub & Shower Bath Drains 216
Tub & Shower Bath Drain Trim Kits 218

DRINKING FAUCETS

Drinking Faucets/Bubbler Heads 219

WALL MOUNTS

Self-Closing Wall Mounts & Stops 223
Wall Mount Single Handle Faucets 223

SPECIALTY

Self-Closing Stops 224
Specialty Valves 225
Specialty Lawn Faucets 225
Specialty Shampoo Faucets 226

ACCESSORIES

Accessories 227

CHARTS

Kitchen/Bathroom Handle Configuration Options 229
Self-Close/Metering Handle Configuration Options 233
Single Basin Handle Configuration Options 234
Tub & Shower Configuration Options 234

PARTS

Replacement for Compression Units Only 235
Replacement for Ceramic Units Only 235
Replacement for Metering (Slow-Close) Units Only 235
Replacement for Self-Close Units Only 235
Replacements for Handles 235
Miscellaneous 236
Parts List 236

TERMS & CONDITIONS 243

Central Brass sprayheads feature aerators that meet ANSI/ASME A112.18.1 flow requirements of 1.1 GPM.
Central Brass faucets feature aerators that meet ANSI/ASME A112.18.1 flow requirements of 1.5 GPM.
Central Brass showerheads feature aerators that meet ANSI/ASME A112.18.1 flow requirements of 1.75 GPM.
Low flow options available upon request.
Builder Tract Packs sold in case quantities only.
Special Order Finishes Available: Allow 10-12 weeks for delivery.

PIONEER / OLYMPIA / CENTRAL BRASS

PRICE INDEX

PRICE INDEX

MODEL	PAGE	PCS/ CS	LIST PRICE
2AM400	60	6	$342.00
2AM400-BN	60	6	$364.50
2AM400-ORB	60	6	$381.10
2AM401	60	6	$437.40
2AM401-BN	60	6	$472.50
2AM401-ORB	60	6	$517.60
2AM500	60	6	$351.10
2AM500-BN	60	6	$363.30
2AM501	60	6	$446.30
2AM501-BN	60	6	$493.60
2AM501-MZ	60	6	$521.80
2AM501-ORB	60	6	$526.90
2AM600	60	6	$325.50
2AM600-BN	60	6	$340.20
2AM600-MZ	60	6	$360.60
2AM600-ORB	60	6	$360.60
2AM600-SS	60	6	$347.10
2AM700	60	6	$409.70
2AM700-BN	60	6	$424.90
2AM700-ORB	60	6	$465.90
2DM201	56	6	$288.30
2DM201-BN	56	6	$315.20
2DM201-ORB	56	6	$328.20
2DM300	56	6	$175.10
2DM301	56	6	$190.20
2DM301-BN	56	6	$215.30
2DM301-MZ	56	6	$241.28
2LG110	50	12	$138.02
2LG160	50	12	$162.10
2LG160H	50	12	$162.70
2LG160H-BN	50	12	$176.40
2LG161	50	12	$192.00
2LG161-BN	50	12	$201.60
2LG161H	50	12	$197.10
2LG161H-BN	50	12	$207.80
2LG162	50	12	$191.00
2LG220	51	6	$249.20
2LG220-BN	51	6	$265.70
2LG240	51	6	$152.30
2LG250	51	6	$354.40
2LG250-BN	51	6	$388.80
2LG260	50	12	$158.20
2LG260-BN	50	12	$172.00
2LG261	50	12	$194.30

MODEL	PAGE	PCS/ CS	LIST PRICE
2MT161H	39	6	$384.80
2MT161H-BN	39	6	$411.80
2MT171H	39	6	$403.90
2MT171H-BN	39	6	$435.50
2MT182H	39	6	$302.20
2MT182H-BN	39	6	$334.70
2MT250	38	6	$442.20
2MT250-BN	38	6	$495.20
2MT250-SS	38	6	$500.00
2MT260	38	6	$474.30
2MT260-BG	38	6	$485.60
2MT260-BN	38	6	$497.00
2MT260-MB	38	6	$536.70
2MT261	38	6	$445.80
2MT261-BN	38	6	$483.79
2MT270	38	4	$491.00
2MT270-BG	38	4	$519.60
2MT270-BN	38	4	$566.00
2MT270-MB	38	4	$570.60
2MT275	38	4	$476.30
2MT275-BN	38	4	$560.40
2MT280	38	6	$268.80
2MT280-BG	38	6	$404.00
2MT280-BN	38	6	$339.10
2MT280-MB	38	6	$353.00
2MT600	39	6	$348.70
2MT600-BN	39	6	$383.90
2MT600-MB	39	6	$403.10
2MT600-SS	39	6	$376.50
2PM440	49	12	$180.40
2PM540	49	12	$180.40
3AM400	61	6	$330.40
3AM400-BN	61	6	$356.40
3AM400-MZ	61	6	$387.20
3AM400-ORB	61	6	$379.80
3BR300	63	6	$147.40
3BR300-BN	63	6	$164.60
3BR300-ORB	63	6	$175.60
3BR310	63	6	$150.20
3BR310-BN	63	6	$164.40
3BR400	63	6	$286.50
3BR400-BN	63	6	$297.30
3BR400-ORB	63	6	$311.20
3BR410	63	6	$283.70

MODEL	PAGE	PCS/ CS	LIST PRICE
3BR410-BN	63	6	$294.40
3DM100	57	6	$178.40
3DM100-BN	57	6	$197.00
3DM200	57	6	$303.50
3DM200-BN	57	6	$324.60
3DM300	57	6	$290.60
3DM300-ORB	57	6	$341.80
3LG130	53	12	$131.90
3LG160	52	12	$147.10
3LG160-BN	52	12	$155.60
3LG160H	52	12	$145.80
3LG160H-BN	52	12	$163.80
3LG161	52	12	$115.70
3LG161G	52	12	$136.60
3LG260H	52	12	$155.10
3LG260H-BN	52	12	$163.60
3LG260H-WD	53	12	$159.10
3LG260H-WD-BN	53	12	$174.20
3LG264H	53	12	$119.60
3LG264H-BN	53	12	$133.50
3LG264H-WD	53	12	$126.50
3LG264H-WD-BN	53	12	$139.60
3MO160	32	6	$251.50
3MO160-BG	32	6	$375.70
3MO160-BN	32	6	$368.20
3MO160-MB	32	6	$304.20
3MO160-WD	32	6	$259.20
3MO160-WD-BG	32	6	$390.30
3MO160-WD-BN	32	6	$384.20
3MO160-WD-MB	32	6	$403.41
3MO168	32	6	$307.70
3MO168-BN	32	6	$363.20
3MO170	33	6	$305.50
3MO170-BG	33	6	$452.20
3MO170-BN	33	6	$447.30
3MO170-MB	33	6	$369.80
3MO180	32	6	$242.90
3MO180-BN	32	6	$325.30
3MO180-MB	32	6	$358.30
3MO180-WD	32	6	$243.10
3MO180-WD-BN	32	6	$316.60
3MO200	33	6	$373.70
3MO200-BN	33	6	$432.50
3MO200-MB	33	6	$434.10

PRICE INDEX

MODEL	PAGE	PCS/ CS	LIST PRICE
3MT160	40	6	$236.00
3MT160-BG	40	6	$242.10
3MT160-BN	40	6	$243.30
3MT160-MB	40	6	$248.80
3MT160-WD-BG	40	6	$251.20
3MT160-WD-BN	40	6	$255.30
3MT168	40	6	$281.80
3MT168-BN	40	6	$292.60
3MT170	40	6	$236.50
3MT170-BN	40	6	$240.90
3MT170-MB	40	6	$248.00
3MT178	40	6	$273.40
3MT180	40	6	$345.20
3MT180-BG	40	6	$364.47
3MT180-BN	40	6	$343.80
3MT180-MB	40	6	$350.60
3MT400	41	6	$422.40
3MT400-BN	41	6	$445.70
3MT420	41	6	$341.20
3MT420-BN	41	6	$395.00
3MT420-MB	41	6	$425.20
3MT500	41	6	$368.40
3MT500-BN	41	6	$381.10
3MT800	40	6	$259.90
3MT800-BN	40	6	$267.10
3MT800-MB	40	6	$272.70
4100B	69	12	$89.00
4400B	69	6	$296.50
4410B	69	12	$206.00
4DM100TX	58	12	$213.20
4DM100TX-BN	58	12	$235.60
4DM100TX-ORB	58	12	$244.40
4LG100TX	54	12	$184.50
4LG100TX-BN	54	12	$206.90
4MO611	36	4	$706.50
4MO611-BN	36	4	$882.20
4MT600	46	6	$322.80
4MT600-BN	46	6	$372.20
4MT600-MB	46	6	$395.40
4MT610	46	4	$433.50
4MT610-BN	46	4	$452.90
4MT840	47	6	$342.40
4MT840-BG	47	6	$378.23
4MT840-BN	47	6	$359.90

MODEL	PAGE	PCS/ CS	LIST PRICE
4MT840-MB	47	6	$375.30
4MT900T	47	1	$1,416.70
4MT900T-BN	47	1	$1,750.00
4MT900T-MB	47	1	$1,802.00
4MT910T	47	1	$1,464.50
4MT910T-BN	47	1	$10.70
4MT910T-MB	47	1	$1,931.90
6DM400	59	6	$252.20
6DM400-BN	59	6	$272.80
6DM400-ORB	59	6	$289.60
6MO101T	36	12	$83.70
6MO101T-BN	36	12	$93.90
6MO101T-MB	36	12	$103.00
6MO400	36	6	$356.70
6MO400-BN	36	6	$441.60
6MT101T	45	12	$79.60
6MT101T-BN	45	12	$91.40
6MT400	46	6	$428.80
6MT400-BN	46	6	$448.70
6MT410	46	6	$207.90
6MT410-BG	46	6	$226.00
6MT410-BN	46	6	$219.70
6MT410-MB	46	6	$220.00
7MO030	37	20	$68.40
7MO030-BG	37	20	$138.40
7MO030-BN	37	20	$88.40
7MO030-MB	37	20	$81.70
7MO031	37	20	$67.20
7MO031-BG	37	20	$125.90
7MO031-BN	37	20	$85.80
7MO031-MB	37	20	$81.30
7MO032	37	40	$45.50
7MO032-BG	37	40	$81.20
7MO032-BN	37	40	$57.40
7MO032-MB	37	40	$54.70
7MO033	37	40	$31.00
7MO033-BG	37	40	$46.80
7MO033-BN	37	40	$37.00
7MO033-MB	37	40	$37.10
7MO034	37	40	$41.50
7MO034-BG	37	40	$77.00
7MO034-BN	37	40	$53.90
7MO034-MB	37	40	$49.90
7MT030	48	20	$114.00

MODEL	PAGE	PCS/ CS	LIST PRICE
7MT030-BN	48	20	$120.70
7MT031	48	20	$104.50
7MT031-BN	48	20	$111.20
7MT032	48	40	$59.90
7MT032-BN	48	40	$63.70
7MT033	48	40	$59.90
7MT033-BN	48	40	$63.70
7MT034	48	40	$59.90
7MT034-BN	48	40	$63.70
SH-401	72	- - -	$27.60
SH-401-BN	72	- - -	$35.20
SH-402	72	- - -	$43.70
SH-402-BN	72	- - -	$49.40
SH-403	72	- - -	$37.10
SH-403-BN	72	- - -	$42.80
SH-601	72	- - -	$46.60
SH-601-BN	72	- - -	$53.20
SH-602	72	40	$46.60
SH-602-BN	72	- - -	$53.20
T-4AM100	62	6	$325.80
T-4AM100-BN	62	6	$375.80
T-4AM100-ORB	62	6	$405.70
T-4DM100	58	12	$155.50
T-4DM100-BN	58	12	$200.10
T-4DM300	58	12	$121.20
T-4DM300-BN	58	12	$163.00
T-4DM300-ORB	58	12	$149.00
T-4DM610	59	6	$240.90
T-4DM610-BN	59	6	$259.90
T-4LG100	54	12	$179.90
T-4LG100-ADA	55	4	$446.50
T-4LG100-BN	54	12	$231.80
T-4LG300	54	12	$160.40
T-4LG300-ADA	55	4	$411.30
T-4LG300-BN	54	12	$190.80
T-4LG400	54	12	$119.00
T-4LG400-ADA	55	4	$368.10
T-4LG400-BN	54	12	$138.70
T-4MO100	34	6	$269.80
T-4MO100-BN	34	6	$333.00
T-4MO100-MB	34	6	$343.00
T-4MO110	34	6	$231.80
T-4MO110-BN	34	6	$300.50
T-4MO110-MB	34	6	$302.00

PRICE INDEX

MODEL	PAGE	PCS/ CS	LIST PRICE
T-4MO200	34	6	$169.40
T-4MO200-BN	34	6	$201.70
T-4MO300	35	6	$211.30
T-4MO300-BN	35	6	$243.30
T-4MO300-MB	35	6	$255.47
T-4MO310	35	6	$130.60
T-4MO310-BN	35	6	$171.50
T-4MO310-MB	35	6	$156.50
T-4MO400	36	6	$104.90
T-4MO400-BN	36	6	$126.70
T-4MO610	36	6	$361.10
T-4MO610-BN	36	6	$445.30
T-4MT110	42	6	$304.10
T-4MT110-6R-MB	42	6	$351.40
T-4MT110-7S	42	12	$271.00
T-4MT110-7S-BN	42	12	$319.00
T-4MT110-7S-MB	42	12	$356.00
T-4MT110-BN	42	6	$351.40
T-4MT110-LS	42	6	$233.10
T-4MT110-MB	42	6	$321.60
T-4MT111	44	6	$236.70
T-4MT111-BN	44	6	$283.80
T-4MT111-MB	44	6	$286.50
T-4MT115	43	6	$431.80
T-4MT115-7S	43	6	$384.00
T-4MT115-7S-BN	43	6	$448.00
T-4MT115-7S-MB	43	6	$463.00
T-4MT115-BN	43	6	$478.30
T-4MT120	43	6	$277.50
T-4MT120-BN	43	6	$337.80
T-4MT131	44	6	$243.40
T-4MT131-7S	44	12	$235.00
T-4MT131-7S-BN	44	12	$282.00
T-4MT131-7S-MB	44	12	$292.00
T-4MT131-BG	44	- - -	$286.20
T-4MT131-BN	44	6	$274.90
T-4MT200	42	6	$193.60
T-4MT200-BN	42	6	$222.40
T-4MT201	42	6	$175.30
T-4MT201-BN	42	6	$222.50
T-4MT300	42	6	$193.50
T-4MT300-6R-MB	42	6	$230.40
T-4MT300-BN	42	6	$241.90
T-4MT300-MB	42	6	$235.60

MODEL	PAGE	PCS/ CS	LIST PRICE
T-4MT315	44	6	$239.30
T-4MT315-BN	44	6	$298.50
T-4MT320	43	6	$158.10
T-4MT320-BN	43	6	$201.30
T-4MT330	45	6	$154.00
T-4MT330-BG	45	6	$250.26
T-4MT330-BN	45	6	$231.50
T-4MT400	45	6	$124.90
T-4MT400-BN	45	6	$147.90
TD-4MO100-ADA	34	6	$336.60
TD-4MO100-ADA-BN	34	6	$506.80
TD-4MO100-ADA-MB	34	6	$527.40
TD-4MO300-ADA	35	6	$273.40
TD-4MO300-ADA-BN	35	6	$423.30
TD-4MO300-ADA-MB	35	6	$436.60
TD-4MT131-ADA	45	6	$336.60
TD-4MT131-ADA-BN	45	6	$479.40
TD-4MT131-ADA-MB	45	6	$503.90
TD-4MT330-ADA	45	6	$278.80
TD-4MT330-ADA-BN	45	6	$401.50
TD-4MT330-ADA-MB	45	6	$413.10
X-1200001	81	- - -	$23.80
X-1200002	81	- - -	$23.80
X-1200004	81	- - -	$17.90
X-1200005C	81	- - -	$16.00
X-1200005H	81	- - -	$16.00
X-1200006	81	- - -	$24.30
X-1200007C	81	- - -	$51.00
X-1200007H	81	- - -	$51.00
X-1200008C	81	- - -	$54.20
X-1200008H	81	- - -	$54.20
X-1200009	81	- - -	$58.40
X-1200010	81	- - -	$29.20
X-1200011	81	- - -	$23.80
X-1200012	81	- - -	$26.00
X-1200016	81	- - -	$20.30
X-1200018	81	- - -	$33.50
X-1200019	81	- - -	$28.10
X-1300001	81	- - -	$23.80
X-1300002	81	- - -	$23.80
X-1300003	81	- - -	$8.90
X-1300004C	81	- - -	$47.80
X-1300004H	81	- - -	$47.80
X-1300006	81	- - -	$19.80

MODEL	PAGE	PCS/ CS	LIST PRICE
X-1300019	81	- - -	$25.70
X-1300020	81	- - -	$34.60
X-1400002	81	- - -	$31.30
X-1400006	81	- - -	$44.60
X-1400025	81	- - -	$20.30
X-1400026	81	- - -	$32.10
X-1400028	81	- - -	$39.00
X-1400029	81	- - -	$92.40
X-1400043	81	- - -	$34.60
X-1400044	81	- - -	$34.60
X-1600001	81	- - -	$33.50
X-1600011	81	- - -	$32.40
X-1900001C	81	- - -	$5.80
X-1900001H	81	- - -	$5.80
X-1900002C	81	- - -	$11.70
X-1900002H	81	- - -	$11.70
X-1900003C	81	- - -	$19.50
X-1900003H	81	- - -	$19.50
X-1900004C	81	- - -	$20.80
X-1900004H	81	- - -	$20.80
X-1900005	81	- - -	$23.80
X-1900007C	81	- - -	$50.00
X-1900007H	81	- - -	$50.00
X-1900008	81	- - -	$23.80
X-1900009C	81	- - -	$31.30
X-1900009H	81	- - -	$31.00
X-1900010C	81	- - -	$19.50
X-1900010H	81	- - -	$19.50
X-1900011C	81	- - -	$17.30
X-1900011H	81	- - -	$17.30
X-1900012C	81	- - -	$22.70
X-1900012H	81	- - -	$22.70
X-2200001	81	- - -	$69.00
X-2200002	81	- - -	$69.00
X-2200003	81	- - -	$72.20
X-2200004	81	- - -	$108.30
X-2200005	81	- - -	$156.00
X-2200008	81	- - -	$47.80
X-2200009	81	- - -	$46.80
X-2200012	81	- - -	$175.10
X-2200013	81	- - -	$175.50
X-2200014	81	- - -	$190.00
X-2200015	81	- - -	$203.80
X-2200017	81	- - -	$190.00

PRICE INDEX

MODEL	PAGE	PCS/ CS	LIST PRICE
X-2200018	81	- - -	$83.90
X-2200019	81	- - -	$105.10
X-2300001	81	- - -	$163.50
X-2300002	81	- - -	$149.30
X-2300003	81	- - -	$182.60
X-2300004	81	- - -	$167.70
X-2300006	81	- - -	$93.40
X-2300008	81	- - -	$145.40
X-2300009	81	- - -	$140.10
X-2300021	81	- - -	$182.60
X-2400001	81	- - -	$109.30
X-2400003	81	- - -	$214.40
X-2400007	81	- - -	$228.10
X-2400008	81	- - -	$250.40
X-2400019	81	- - -	$353.60
X-2400020	81	- - -	$408.50
X-2400021	81	- - -	$136.60
X-2500001	81	- - -	$47.80
X-2500002	81	- - -	$55.30
X-2500003	81	- - -	$105.10
X-3200001	76	- - -	$17.00
X-3200002	79	- - -	$3.70
X-3200003	78	- - -	$16.10
X-3200004C	78	- - -	$26.20
X-3200004H	78	- - -	$26.20
X-3300002C	81	- - -	$14.20
X-3300002H	81	- - -	$15.20
X-3300006	81	- - -	$15.50
X-3300007	81	- - -	$16.10
X-3400001	78	- - -	$10.80
X-3400002	76	- - -	$14.70
X-3400003	76	- - -	$22.90
X-3400004	81	- - -	$127.90
X-3400007	76	- - -	$52.50
X-3600001	77	- - -	$24.70
X-3600003	77	- - -	$21.50
X-3900001	77	- - -	$14.00
X-3900002C	78	- - -	$12.30
X-3900002H	81	- - -	$12.30
X-3900003	77	- - -	$14.90
X-3900004C	78	- - -	$13.40
X-3900004H	78	- - -	$13.40
X-3900008	81	- - -	$17.00
X-4200001	82	- - -	$8.10

MODEL	PAGE	PCS/ CS	LIST PRICE
X-4200002	82	- - -	$5.00
X-4200003	82	- - -	$0.90
X-4200004	82	- - -	$1.50
X-4200005	82	- - -	$33.00
X-4200006	82	- - -	$2.60
X-4200007	79	- - -	$2.60
X-4200010	82	- - -	$31.90
X-4200011	82	- - -	$3.70
X-4200012	82	- - -	$1.50
X-4200013	82	- - -	$1.70
X-4200014	82	- - -	$26.50
X-4200015	80	- - -	$4.20
X-4200016	79	- - -	$8.80
X-4200017	82	- - -	$24.30
X-4200018	82	- - -	$33.80
X-4200020	82	- - -	$42.20
X-4200021	82	- - -	$30.80
X-4200022	82	- - -	$2.60
X-4200023	82	- - -	$19.10
X-4200025	82	- - -	$38.60
X-4200032	82	- - -	$4.80
X-4200041	82	- - -	$9.70
X-4200043	82	- - -	$17.70
X-4200044	82	- - -	$10.00
X-4200045	82	- - -	$7.00
X-4200046	79	- - -	$2.60
X-4200048	82	- - -	$14.60
X-4200049	82	- - -	$2.60
X-4200050	82	- - -	$1.50
X-4200051	82	- - -	$1.50
X-4200053	82	- - -	$6.10
X-4200054	82	- - -	$8.90
X-4200055C	82	- - -	$3.70
X-4200055H	82	- - -	$3.70
X-4200056	82	- - -	$29.80
X-4200057	82	- - -	$10.00
X-4200058	82	- - -	$6.40
X-4200089	82	- - -	$40.60
X-4200090	82	- - -	$1.50
X-4200109	82	- - -	$27.60
X-4200111	82	- - -	$26.20
X-4200112	82	- - -	$1.90
X-4200113	82	- - -	$0.90
X-4200114	82	- - -	$12.40

MODEL	PAGE	PCS/ CS	LIST PRICE
X-4200152	82	- - -	$25.30
X-4200155	82	- - -	$8.30
X-4200169	82	- - -	$35.20
X-4200178	82	- - -	$1.70
X-4200180	82	- - -	$58.40
X-4200180-BN	82	- - -	$62.70
X-4200181	82	- - -	$42.20
X-4200181-BN	82	- - -	$45.40
X-4200189	82	- - -	$24.90
X-4300003	82	- - -	$2.00
X-4300004	82	- - -	$2.60
X-4300005	82	- - -	$0.90
X-4300006	82	- - -	$2.60
X-4300008	82	- - -	$14.10
X-4300010	82	- - -	$19.10
X-4300011	82	- - -	$17.50
X-4300015	82	- - -	$12.50
X-4300018	82	- - -	$1.50
X-4300022	82	- - -	$97.40
X-4300024	82	- - -	$1.50
X-4300038	82	- - -	$18.20
X-4300041	82	- - -	$15.80
X-4300043	82	- - -	$48.70
X-4300047	82	- - -	$14.60
X-4300058	82	- - -	$9.70
X-4300059	82	- - -	$10.20
X-4300061	82	- - -	$15.20
X-4300062	82	- - -	$20.10
X-4300064	82	- - -	$15.80
X-4300065	82	- - -	$22.30
X-4300087	82	- - -	$18.10
X-4300088	82	- - -	$5.50
X-4300089	82	- - -	$3.30
X-4300090	82	- - -	$9.80
X-4300091	82	- - -	$12.00
X-4300093	82	- - -	$0.90
X-4300094	82	- - -	$11.90
X-4300097	82	- - -	$10.90
X-4300098	82	- - -	$13.30
X-4300101	82	- - -	$24.30
X-4300102	82	- - -	$6.50
X-4400002	82	50	$12.50
X-4400005	79	- - -	$48.40
X-4400014	82	- - -	$37.20

PRICE INDEX

MODEL	PAGE	PCS/ CS	LIST PRICE
X-4400015	82	- - -	$43.60
X-4400016	82	- - -	$8.10
X-4400017	82	- - -	$1.50
X-4400018	82	- - -	$0.90
X-4400024	82	- - -	$1.50
X-4400028	82	- - -	$1.50
X-4400030	82	- - -	$25.30
X-4400043	82	- - -	$84.10
X-4400058	82	- - -	$0.90
X-4400062	82	- - -	$5.30
X-4400063	82	- - -	$14.40
X-4400065	82	- - -	$28.90
X-4400070	79	- - -	$38.60
X-4400073	82	- - -	$3.40
X-4400080	82	- - -	$4.80
X-4400089	80	- - -	$51.50
X-4400099	83	- - -	$1.50
X-4400102	83	- - -	$5.30
X-4400105	83	- - -	$24.50
X-4400106	83	- - -	$83.60
X-4400108	83	- - -	$27.10
X-4400109	83	- - -	$31.90
X-4400113	83	- - -	$12.30
X-4400114	83	- - -	$10.60
X-4500001	83	- - -	$13.00
X-4500002	83	- - -	$15.80
X-4500003	83	- - -	$2.00
X-4600001	83	- - -	$33.80
X-4600002	83	- - -	$1.50
X-4600003	83	- - -	$105.10
X-4600004	83	- - -	$47.80
X-4600005	83	- - -	$15.40
X-4600011	83	- - -	$42.50
X-4600015	83	- - -	$62.70
X-4600016	83	- - -	$95.50
X-4600020	83	- - -	$4.20
X-4600025	83	- - -	$2.60
X-4600031	83	- - -	$57.70
X-4600032	83	- - -	$20.70
X-4600035	83	- - -	$27.80
X-4600036	83	- - -	$1.50
X-4600045	80	- - -	$21.80
X-4600048	83	- - -	$109.30
X-4900001	83	- - -	$1.20

MODEL	PAGE	PCS/ CS	LIST PRICE
X-4900002	83	- - -	$1.50
X-4900004	83	- - -	$3.70
X-4900005C	83	- - -	$1.50
X-4900005H	83	- - -	$1.50
X-4900006	83	- - -	$1.50
X-4900007	83	- - -	$2.10
X-4900008	83	- - -	$1.50
X-4900009C	83	- - -	$1.50
X-4900009H	83	- - -	$1.50
X-4900010	83	- - -	$1.50
X-4900011C	83	- - -	$1.00
X-4900011H	83	- - -	$1.00
X-4900012	83	- - -	$1.50
X-4900013	83	- - -	$1.50
X-4900014C	83	- - -	$2.70
X-4900014H	83	- - -	$2.70
X-4900015	83	- - -	$1.50
X-4900017	83	- - -	$13.00
X-4900018	83	- - -	$5.10
X-4900019	79	- - -	$1.50
X-4900020	83	- - -	$23.20
X-4900022	83	- - -	$5.00
X-4900023	83	- - -	$18.90
X-4900024	83	- - -	$1.50
X-4900026	83	- - -	$1.00
X-4900029	83	- - -	$1.50
X-4900030	83	- - -	$2.10
X-4900032	83	- - -	$13.00
X-4900034	83	- - -	$17.10
X-4900035	83	- - -	$1.50
X-4900036	83	- - -	$1.50
X-4900037	83	- - -	$2.30
X-4900038	83	- - -	$1.50
X-4900041	83	- - -	$5.60
X-4900042C	83	- - -	$2.90
X-4900042H	83	- - -	$2.90
X-4900044	83	- - -	$2.40
X-4900047	83	- - -	$1.50
X-4900049	83	- - -	$72.00
X-4900066	83	- - -	$1.50
X-4900072	83	- - -	$8.80
X-4900073	83	- - -	$16.30
X-4900080	83	- - -	$1.50
X-4900081	83	- - -	$10.80

MODEL	PAGE	PCS/ CS	LIST PRICE
X-4900082	83	- - -	$10.70
X-4900083	83	- - -	$15.00
X-4900084	83	- - -	$10.70
X-4900085	83	- - -	$11.60
X-4900086	83	- - -	$15.90
X-4900089	83	- - -	$8.10
X-4900090	83	- - -	$96.20
X-4900091	83	- - -	$15.70
X-4900092	83	- - -	$11.30
X-4900093	83	- - -	$20.00
X-4900096	83	- - -	$10.50
X-4900097	83	- - -	$18.50
X-4900105	80	- - -	$9.00
X-4900112	83	- - -	$98.70
X-4900116	83	- - -	$1.70
X-4900117	75	- - -	$423.20
X-4900122	83	- - -	$14.10
X-4900124	83	- - -	$13.90
X-4900125	83	- - -	$45.50
X-4900125-BN	83	- - -	$55.60
X-5200003	83	- - -	$3.80
X-5200008	83	- - -	$6.50
X-5200009	83	- - -	$3.20
X-5200015	83	- - -	$8.40
X-5200019	83	- - -	$5.70
X-5300001	83	- - -	$3.20
X-5300003	84	- - -	$3.50
X-5300005	84	- - -	$2.70
X-5300007	84	- - -	$8.10
X-5300008	84	- - -	$18.70
X-5300012	84	- - -	$8.70
X-5400003	84	- - -	$19.10
X-5400008	80	- - -	$4.20
X-5400009	80	- - -	$6.30
X-5400010	80	- - -	$6.70
X-5600001	84	- - -	$1.50
X-5600004	84	- - -	$4.40
X-5900001	84	- - -	$8.20
X-6200001	75	- - -	$48.30
X-6200002	75	- - -	$53.60
X-6300001	84	- - -	$42.90
X-6300002	84	- - -	$54.70
X-6300003	84	- - -	$38.60
X-6300005	84	- - -	$52.60

PRICE INDEX

MODEL	PAGE	PCS/ CS	LIST PRICE
X-6300006	84	- - -	$41.90
X-6300008	84	- - -	$44.00
X-6300010	84	25	$69.70
X-6300011	84	25	$73.70
X-6300012	84	- - -	$44.00
X-6300020	84	- - -	$57.90
X-6300029	84	- - -	$49.10
X-6300030	84	- - -	$50.70
X-6400002	84	- - -	$14.20
X-6400003	84	- - -	$11.80
X-6400004	71	21	$131.80
X-6400005	84	- - -	$60.00
X-6400006	84	- - -	$23.00
X-6400007	84	- - -	$50.40
X-6400008	84	- - -	$42.90
X-6400011	84	- - -	$16.30
X-6400012	70	6	$71.70
X-6400013	71	6	$67.20
X-6400015	84	- - -	$5.20
X-6400021	84	- - -	$41.80
X-6400022	84	- - -	$30.80
X-6400024	84	- - -	$102.90
X-6400029	84	100	$26.70
X-6400029-BN	84	100	$27.80
X-6400030	84	100	$21.80
X-6400030-BN	84	100	$23.20
X-6400030-ORB	84	100	$25.70
X-6400031	84	100	$17.40
X-6400031-BN	84	100	$18.40
X-6400031-ORB	84	100	$21.20
X-6400032	84	200	$12.40
X-6400032-ORB	84	200	$15.30
X-6400033	84	200	$11.50
X-6400033-BN	84	200	$12.40
X-6400033-ORB	84	200	$13.60
X-6400034	84	200	$9.80
X-6400034-BN	84	200	$10.70
X-6400034-ORB	84	200	$11.70
X-6400038	70	6	$274.00
X-6400045	70	65	$47.60
X-6400045-BN	70	65	$49.30
X-6400051	84	- - -	$218.50
X-6400052	71	30	$35.20
X-6400052-BN	71	30	$41.90

MODEL	PAGE	PCS/ CS	LIST PRICE
X-6400055	70	18	$59.00
X-6400055-BN	70	18	$63.40
X-6400057	71	- - -	$140.10
X-6400058	84	- - -	$48.30
X-6400059	84	- - -	$42.90
X-6400064	84	- - -	$41.90
X-6400078	70	18	$45.10
X-6400079	71	- - -	$37.50
X-6400081	71	- - -	$27.30
X-6400081-BN	71	- - -	$41.90
X-6400085	71	- - -	$72.90
X-6400085-BN	71	- - -	$83.60
X-6400085-MB	71	- - -	$83.60
X-6400086	84	- - -	$83.50
X-6400088	70	- - -	$42.70
X-6400095	70	- - -	$64.90
X-6400097	71	- - -	$133.60
X-6400102	84	25	$39.60
X-6400103	84	- - -	$12.40
X-6400104	84	- - -	$32.20
X-6600001	84	- - -	$28.40

PRICE INDEX

MODEL	PAGE	PCS/ CS	LIST PRICE
ACS-300100	159	50	$9.00
ACS-300200	159	50	$11.60
ACS-300400	159	50	$15.20
ACS-300500	159	50	$16.00
ACS-903100	160	96	$9.20
ACS-903100-BN	160	96	$12.90
ACS-903100-ORB	160	96	$14.20
ACS-903500	160	25	$26.10
ACS-903500-BN	160	25	$35.50
B-8150	117	12	$83.00
B-8150-BN	117	12	$111.30
B-8160	117	12	$75.50
B-8160-BN	117	12	$97.30
B-8170	131	12	$79.40
B-8171	131	12	$66.80
B-8180	131	12	$85.80
B-8181	131	12	$72.90
B-8190	131	12	$82.40
B-8191	131	12	$69.50
D-820H-PVC	155	20	$50.00
D-820H-PVC-BN	155	20	$71.00
D-820H-PVC-MB	155	20	$72.00
D-820HE-PVC	155	12	$48.00
D-820HE-PVC-BN	155	12	$65.00
D-820HE-PVC-ORB	155	12	$69.00
D-820R-PVC	155	24	$29.00
D-820RS-PVC	156	20	$35.00
D-820T	156	22	$18.00
D-820T-BN	156	22	$39.00
D-820T-MB	156	22	$40.00
D-820T-ORB	156	22	$40.00
D-820TE	156	22	$16.00
D-820TE-BN	156	22	$33.40
D-820TE-ORB	156	22	$37.00
K-4160	127	12	$84.20
K-4160-BN	127	12	$120.40
K-4160-ORB	127	12	$126.70
K-4160B	127	12	$85.70
K-4160B-BN	127	12	$117.60
K-4160H	127	12	$97.80
K-4161	127	12	$101.90
K-4161-BN	127	12	$132.30
K-4161-ORB	127	12	$132.20
K-4161B	127	12	$103.40
K-4161B-BN	127	12	$131.30
K-4161H	127	12	$113.20

MODEL	PAGE	PCS/ CS	LIST PRICE
K-4161H-BN	127	12	$141.70
K-4162	127	12	$111.00
K-4162-BN	127	12	$143.60
K-4162B	127	12	$107.20
K-4162H	127	12	$122.10
K-4163	128	12	$102.30
K-4164	128	12	$113.80
K-4170	128	12	$84.40
K-4170-BN	128	12	$108.30
K-4171	128	12	$98.50
K-5010	92	6	$272.00
K-5010-BN	92	6	$312.70
K-5010-MB	92	6	$321.90
K-5015	92	6	$279.60
K-5015-BN	92	6	$340.80
K-5015-MB	92	6	$357.84
K-5020	91	6	$241.10
K-5020-BN	91	6	$282.70
K-5020-MB	91	6	$270.60
K-5020-ST	91	6	$282.70
K-5020-TL	91	6	$344.00
K-5020-TL-BN	91	6	$382.00
K-5020-TL-MB	91	6	$404.00
K-5025	91	6	$254.90
K-5025-BN	91	6	$310.10
K-5025-MB	91	6	$314.20
K-5030	127	6	$181.70
K-5030-BN	127	6	$224.60
K-5030-ORB	127	6	$230.90
K-5040	115	6	$236.50
K-5040-BN	115	6	$296.80
K-5040-MZ	115	6	$330.30
K-5040-ORB	115	6	$317.30
K-5045	115	6	$266.80
K-5045-BN	115	6	$311.10
K-5045-ORB	115	6	$358.00
K-5060	104	6	$259.60
K-5060-BN	104	6	$317.30
K-5060-MB	104	6	$320.40
K-5070	104	6	$308.00
K-5070-BN	104	6	$353.50
K-5070-MB	104	6	$378.80
K-5120	129	12	$75.00
K-5121	129	12	$85.40
K-5130	129	12	$78.40
K-5131	129	12	$88.20

MODEL	PAGE	PCS/ CS	LIST PRICE
K-5150	129	12	$84.40
K-5160	129	12	$82.70
K-5161	130	12	$93.60
K-5170	130	12	$89.60
K-5171	130	12	$96.90
K-5270	130	6	$84.30
K-5271	130	6	$94.80
K-5340	116	6	$96.80
K-5340-BN	116	6	$139.20
K-5342	116	6	$118.70
K-5342-BN	116	6	$167.50
K-5342-ORB	116	6	$185.20
K-5350	116	6	$99.70
K-5370	116	6	$102.20
K-5370-BN	116	6	$147.40
K-5372	116	6	$126.00
K-5372-BN	116	6	$170.80
K-5441	115	6	$270.30
K-5441-BN	115	6	$318.00
L-6000	110	12	$196.00
L-6000-BN	110	12	$221.20
L-6000-MB	110	12	$230.00
L-6000-WD	110	12	$206.00
L-6000-WD-BN	110	12	$233.00
L-6000-WD-MB	110	12	$257.00
L-6000B	110	12	$196.00
L-6001	110	12	$180.00
L-6001-BN	110	12	$199.00
L-6001-MB	110	12	$209.00
L-6001-WD	110	12	$190.00
L-6001-WD-BN	110	12	$212.00
L-6002	110	12	$204.00
L-6002-BG	110	12	$275.00
L-6002-BN	110	12	$227.00
L-6002-MB	110	12	$238.00
L-6002-WD	110	12	$214.00
L-6002-WD-BG	110	12	$301.00
L-6002-WD-BN	110	12	$240.00
L-6002-WD-MB	110	12	$265.00
L-6002B	110	12	$203.00
L-6003	110	12	$204.00
L-6003-BN	110	12	$227.00
L-6003-MB	110	12	$238.00
L-6005	110	12	$196.00
L-6005-BN	110	12	$219.00
L-6005-MB	110	12	$230.00

PRICE INDEX

MODEL	PAGE	PCS/ CS	LIST PRICE
L-6010	105	12	$173.40
L-6010-BN	105	12	$226.20
L-6010-MB	105	12	$236.90
L-6010-WD	105	12	$182.20
L-6010-WD-BN	105	12	$244.90
L-6010B	105	12	$169.70
L-6011	105	12	$154.50
L-6011-BN	105	12	$201.60
L-6011-WD	105	12	$161.80
L-6011-WD-BN	105	12	$215.40
L-6012	105	12	$175.20
L-6012-BN	105	12	$240.00
L-6012-WD	105	12	$185.50
L-6012-WD-BN	105	12	$244.80
L-6012B	105	12	$185.20
L-6013	105	12	$180.40
L-6013-BN	105	12	$203.90
L-6015	105	12	$170.10
L-6020	99	12	$161.30
L-6020-BN	99	12	$213.60
L-6020-MB	99	12	$238.20
L-6020-WD	99	12	$173.00
L-6020-WD-BN	99	12	$230.10
L-6020B	99	12	$159.30
L-6021	99	12	$142.60
L-6021-BN	99	12	$189.70
L-6021-WD	99	12	$150.90
L-6021-WD-BN	99	12	$200.80
L-6022	99	12	$166.50
L-6022-BN	99	12	$223.70
L-6022-MB	99	12	$234.89
L-6022-WD	99	12	$174.90
L-6022-WD-BN	99	12	$232.60
L-6022B	99	12	$166.10
L-6023	99	12	$171.70
L-6025	99	- - -	$147.10
L-6030	88	12	$152.30
L-6030-BN	88	12	$192.00
L-6030-MB	88	12	$239.70
L-6030-WD	88	12	$162.90
L-6030-WD-BN	88	12	$216.70
L-6030-WD-MB	88	12	$227.54
L-6030B	88	12	$152.40
L-6031	88	12	$141.60
L-6031-BN	88	12	$180.30
L-6031-WD	88	12	$150.40

MODEL	PAGE	PCS/ CS	LIST PRICE
L-6031-WD-BN	88	12	$201.00
L-6032	88	12	$160.60
L-6032-BN	88	12	$210.80
L-6032-MB	88	12	$252.90
L-6032-WD	88	12	$168.10
L-6032-WD-BN	88	12	$227.10
L-6032B	88	12	$157.60
L-6033	88	12	$165.10
L-6050	93	12	$151.50
L-6050-BN	93	12	$203.90
L-6050-MB	93	12	$217.50
L-6050-WD	93	12	$164.60
L-6050-WD-BN	93	12	$218.80
L-6050-WD-MB	93	12	$229.74
L-6050B	93	12	$150.90
L-6050B-BN	93	12	$201.90
L-6051	93	12	$141.50
L-6051-BN	93	12	$193.50
L-6051-WD	93	12	$151.90
L-6051-WD-BN	93	12	$209.10
L-6051G	93	12	$161.90
L-6051G-BN	93	12	$210.30
L-6051G-WD	93	12	$167.20
L-6051G-WD-BN	93	12	$222.30
L-6052	94	12	$161.40
L-6052-BN	94	12	$212.90
L-6052-MB	94	12	$220.60
L-6052-WD	94	12	$168.20
L-6052-WD-BN	94	12	$222.60
L-6052-WD-MB	94	12	$213.00
L-6052B	94	12	$157.70
L-6052B-BN	94	12	$210.80
L-6053	94	12	$161.30
L-6053-BN	94	12	$173.20
L-6055	94	12	$156.10
L-6055-BN	94	12	$206.10
L-6090	111	12	$251.60
L-6090-BN	111	12	$285.20
L-6090-MB	111	12	$281.00
L-6090-WD	111	12	$251.70
L-6090-WD-BN	111	12	$297.20
L-6090-WD-MB	111	12	$312.06
L-6090B	111	12	$247.00
L-6092	111	12	$252.70
L-6092-BG	111	12	$301.60
L-6092-BN	111	12	$280.30

MODEL	PAGE	PCS/ CS	LIST PRICE
L-6092-MB	111	12	$288.70
L-6092-WD	111	12	$258.40
L-6092-WD-BG	111	12	$326.56
L-6092-WD-BN	111	12	$306.40
L-6092-WD-MB	111	12	$321.72
L-6092B	111	12	$249.00
L-6093	111	12	$242.20
L-6093-BN	111	12	$281.10
L-6093-MB	111	12	$286.60
L-6095	111	12	$234.20
L-6095-BN	111	12	$274.30
L-6160	132	12	$84.80
L-6160-BN	132	12	$108.50
L-6160-E0.5	132	12	$87.00
L-6160-ORB	132	12	$117.00
L-6160B	132	12	$85.80
L-6160B-BN	132	12	$106.20
L-6160B-E0.5	132	12	$85.70
L-6160H	132	12	$85.90
L-6160H-BN	132	12	$113.10
L-6161	132	12	$72.60
L-6161-E0.35	132	12	$74.70
L-6161G	132	12	$87.30
L-6161G-E0.35	132	12	$90.10
L-6161H	132	12	$74.40
L-6162	132	12	$91.40
L-6162-BN	132	12	$121.60
L-6162-ORB	132	12	$125.00
L-6162B	132	12	$89.90
L-6162H	132	12	$92.90
L-6164	133	12	$70.40
L-6165B	133	12	$86.50
L-6165B-BN	133	12	$103.60
L-6170	133	12	$87.30
L-6171	133	12	$72.60
L-6172	133	12	$87.10
L-6172-BN	133	12	$115.90
L-6174	134	12	$71.10
L-6260BH	134	12	$107.10
L-6260BH-BN	134	12	$145.50
L-6260H	134	12	$106.90
L-6260H-BN	134	12	$144.90
L-6262BH	134	12	$109.70
L-6262H	134	12	$110.30
L-6262H-BN	134	12	$149.30
L-7220	135	12	$64.10

PRICE INDEX

MODEL	PAGE	PCS/ CS	LIST PRICE
L-7221	135	12	$51.90
L-7222	135	12	$73.10
L-7240	118	12	$83.30
L-7240-BN	118	12	$101.80
L-7240-ORB	118	12	$114.80
L-7240B	118	12	$83.40
L-7240B-BN	118	12	$103.50
L-7241	118	12	$70.40
L-7241-BN	118	12	$88.00
L-7242	118	12	$90.60
L-7242-BN	118	12	$113.80
L-7242-MZ	118	12	$134.30
L-7242-ORB	118	12	$128.80
L-7242B	118	12	$90.00
L-7245	118	- - -	$81.70
L-7245-BN	118	- - -	$109.40
L-7251	136	12	$68.10
L-7251G	136	12	$84.40
L-7270	118	12	$90.70
L-7270-BN	118	12	$110.40
L-7270B-BN	118	12	$104.10
L-7271	118	12	$74.70
L-7272	119	12	$91.90
L-7272-BN	119	12	$118.70
L-7272B	119	12	$93.20
L-7290	135	12	$68.20
L-7291	135	12	$55.30
L-7292	136	12	$76.90
L-7330	120	6	$178.00
L-7330-BN	120	6	$222.80
L-7330-ORB	120	6	$233.30
L-7332	120	6	$180.30
L-7332-BN	120	6	$219.60
L-7332-ORB	120	6	$246.10
L-7372	120	6	$185.00
L-7372-BN	120	6	$235.10
L-7372-ORB	120	6	$252.00
L-7400	112	6	$252.50
L-7400-BN	112	6	$299.00
L-7400-MB	112	6	$311.00
L-7402	112	6	$270.00
L-7402-BG	112	6	$395.80
L-7402-BN	112	6	$320.00
L-7402-MB	112	6	$336.00
L-7420	100	6	$231.80
L-7420-BN	100	6	$263.60

MODEL	PAGE	PCS/ CS	LIST PRICE
L-7422	100	6	$237.50
L-7422-BG	100	6	$309.50
L-7422-BN	100	6	$265.20
L-7422-MB	100	6	$283.40
L-7432	100	6	$224.00
L-7432-BN	100	6	$242.00
L-7432-MB	100	6	$247.00
L-7470	119	6	$225.20
L-7470-BN	119	6	$256.00
L-7470-ORB	119	6	$266.50
L-7472	119	6	$237.40
L-7472-BN	119	6	$269.10
L-7472-ORB	119	6	$269.80
L-7490	112	6	$306.70
L-7490-BN	112	6	$364.40
L-7490-MB	112	6	$362.70
L-7492	112	6	$332.60
L-7492-BN	112	6	$366.30
L-7492-MB	112	6	$380.70
L-7520	100	8	$178.70
L-7520-BN	100	8	$220.70
L-7520B	100	8	$174.10
L-7520B-BN	100	8	$207.30
L-7522	100	8	$183.10
L-7522-BN	100	8	$215.80
L-7522-MB	100	8	$209.70
L-7522B	100	8	$176.80
L-7570	119	12	$148.90
L-7570-BN	119	12	$182.50
L-7570-ORB	119	12	$192.60
L-7570B	119	12	$148.10
L-7570B-BN	119	12	$181.10
L-7572	119	12	$152.90
L-7572-BN	119	12	$185.10
L-7572-ORB	119	12	$198.00
L-7572B	119	12	$153.60
OP-120001	167	- - -	$18.90
OP-120002	167	- - -	$17.30
OP-120003	167	- - -	$23.90
OP-120004	167	- - -	$16.30
OP-130001	167	- - -	$15.20
OP-130002	167	- - -	$19.50
OP-130003	167	- - -	$17.40
OP-140004V	167	- - -	$11.50
OP-140005V	167	- - -	$6.50
OP-140006	167	- - -	$10.70

MODEL	PAGE	PCS/ CS	LIST PRICE
OP-140007	167	- - -	$34.90
OP-140008	167	- - -	$19.00
OP-140008-BN	167	- - -	$31.70
OP-140009	167	- - -	$12.20
OP-140010	167	- - -	$12.30
OP-140011	167	- - -	$23.90
OP-140013C	167	- - -	$6.80
OP-140013H	167	- - -	$6.80
OP-140013V	167	- - -	$7.30
OP-140014	167	- - -	$18.40
OP-140015	167	- - -	$23.00
OP-140017	167	- - -	$36.50
OP-140018	167	- - -	$26.00
OP-140019	167	- - -	$28.50
OP-140020	167	- - -	$26.00
OP-140021	167	- - -	$28.20
OP-160001	167	- - -	$17.80
OP-160002	167	- - -	$11.40
OP-160003	167	- - -	$23.90
OP-190001	167	- - -	$15.60
OP-190002	167	- - -	$14.40
OP-190003C	167	- - -	$4.20
OP-190003H	167	- - -	$4.20
OP-190004C	167	- - -	$4.80
OP-190004H	167	- - -	$4.80
OP-190005C	167	- - -	$11.50
OP-190005H	167	- - -	$11.50
OP-190006C	167	- - -	$10.70
OP-190006H	167	- - -	$10.70
OP-190008	167	- - -	$7.00
OP-190009C	167	- - -	$6.50
OP-190009H	167	- - -	$7.00
OP-190010C	167	- - -	$15.60
OP-190010H	167	- - -	$15.60
OP-190013C	167	- - -	$11.50
OP-190013H	167	- - -	$11.50
OP-190014C	167	- - -	$15.60
OP-190014H	167	- - -	$15.60
OP-190015C	167	- - -	$15.70
OP-190015H	167	- - -	$15.60
OP-190016C	167	- - -	$19.10
OP-190016H	167	- - -	$19.10
OP-220001	167	- - -	$41.20
OP-220002	167	- - -	$34.70
OP-220003	167	- - -	$47.00
OP-220004	167	- - -	$38.00

PRICE INDEX

MODEL	PAGE	PCS/ CS	LIST PRICE
OP-220005	167	- - -	$31.00
OP-230001	167	- - -	$124.70
OP-230005	167	- - -	$156.80
OP-230006	167	- - -	$107.10
OP-240007	167	- - -	$140.80
OP-250002	167	- - -	$32.60
OP-250004	167	- - -	$33.00
OP-250005	167	- - -	$29.70
OP-250007	167	- - -	$31.00
OP-320001	167	- - -	$16.50
OP-320002	162	- - -	$16.70
OP-330002C	162	- - -	$9.60
OP-330002H	162	- - -	$9.60
OP-340001	162	- - -	$17.40
OP-340002	162	- - -	$16.50
OP-340004C	162	- - -	$12.90
OP-340004H	162	- - -	$12.90
OP-340006C	162	- - -	$4.90
OP-340006H	162	- - -	$4.90
OP-340007	163	- - -	$7.10
OP-340009	163	200	$43.80
OP-340010	167	- - -	$1.70
OP-360001	163	- - -	$16.40
OP-390001	164	- - -	$4.20
OP-390003	164	- - -	$15.50
OP-390004	164	- - -	$5.50
OP-390005	167	- - -	$5.50
OP-420001	167	- - -	$0.90
OP-420002	167	- - -	$0.90
OP-420003	167	- - -	$22.50
OP-420004	167	- - -	$2.00
OP-420005	165	- - -	$2.90
OP-420006	167	- - -	$15.30
OP-420008	167	- - -	$5.90
OP-420009	167	- - -	$8.50
OP-420010	167	- - -	$0.90
OP-420011	167	- - -	$0.90
OP-420012	167	- - -	$24.60
OP-420012-BN	167	- - -	$30.90
OP-420012-ORB	167	- - -	$50.60
OP-420013	167	- - -	$18.20
OP-420014	167	- - -	$11.70
OP-420015	167	- - -	$30.50
OP-420017	167	- - -	$0.90
OP-420018	167	- - -	$4.20
OP-420019	167	- - -	$0.90

MODEL	PAGE	PCS/ CS	LIST PRICE
OP-420020	167	- - -	$0.90
OP-420021	167	- - -	$4.60
OP-420023	168	- - -	$9.30
OP-420024	165	- - -	$6.40
OP-420025	168	- - -	$14.70
OP-420026	168	- - -	$1.40
OP-420041	168	- - -	$1.10
OP-420042	168	- - -	$3.60
OP-420043	168	- - -	$7.10
OP-420044	168	- - -	$0.90
OP-420045	168	- - -	$14.00
OP-420046	168	- - -	$1.30
OP-420047	168	- - -	$0.90
OP-420048	168	- - -	$7.10
OP-420049	168	- - -	$6.40
OP-420050	168	- - -	$2.90
OP-420055	168	- - -	$11.90
OP-420056	168	- - -	$1.10
OP-420057	168	- - -	$3.60
OP-420058	168	- - -	$7.70
OP-420059	168	- - -	$0.90
OP-420060	168	- - -	$0.70
OP-420061	168	- - -	$0.90
OP-420062	168	- - -	$11.10
OP-420063	168	- - -	$22.00
OP-420064	168	- - -	$37.00
OP-420064-BN	168	- - -	$41.10
OP-420067	168	- - -	$26.00
OP-420068	168	- - -	$27.00
OP-420068-BN	168	- - -	$31.10
OP-420069	168	- - -	$54.10
OP-420070	168	- - -	$14.30
OP-420071	168	- - -	$36.40
OP-420074	168	- - -	$21.60
OP-420075	168	- - -	$1.40
OP-420077	168	- - -	$16.90
OP-420092	160	- - -	$117.00
OP-420092-BN	160	- - -	$124.00
OP-420092-MB	160	- - -	$124.00
OP-430001	168	- - -	$4.20
OP-430005	168	- - -	$2.50
OP-430006	161	- - -	$5.90
OP-430007	161	- - -	$8.30
OP-430007-BN	161	- - -	$11.80
OP-430007-ORB	161	- - -	$12.30
OP-430008	168	- - -	$2.80

MODEL	PAGE	PCS/ CS	LIST PRICE
OP-430009	168	- - -	$3.00
OP-430010	168	- - -	$1.30
OP-430011	161	- - -	$9.80
OP-430011-BN	161	- - -	$15.30
OP-430011-ORB	161	- - -	$16.40
OP-430012	161	- - -	$11.60
OP-430012-BN	161	- - -	$12.90
OP-430012-ORB	161	- - -	$14.20
OP-430016	168	- - -	$5.80
OP-430017	168	- - -	$4.80
OP-430018	168	- - -	$5.40
OP-430019	168	- - -	$1.90
OP-430020	168	- - -	$1.90
OP-430021	168	- - -	$7.10
OP-430023	168	- - -	$1.20
OP-430024	168	- - -	$6.40
OP-430025	168	- - -	$0.90
OP-430026	168	- - -	$18.50
OP-430027	168	- - -	$12.60
OP-430028	168	- - -	$1.40
OP-430029	168	- - -	$0.90
OP-430030	168	- - -	$9.00
OP-430031	168	- - -	$7.10
OP-430032	168	- - -	$7.80
OP-430033	168	- - -	$2.80
OP-430035	168	- - -	$3.60
OP-430036	168	- - -	$12.70
OP-430037	168	- - -	$12.70
OP-430046	168	- - -	$10.00
OP-440007	165	- - -	$11.00
OP-440008	168	- - -	$0.90
OP-440009	168	- - -	$22.10
OP-440010	168	- - -	$3.60
OP-440011	168	- - -	$2.70
OP-440012	168	- - -	$5.50
OP-440013	168	- - -	$0.90
OP-440014	165	- - -	$2.10
OP-440015	168	- - -	$4.90
OP-440016	168	- - -	$5.50
OP-440017	168	- - -	$1.30
OP-440018	168	- - -	$23.20
OP-440019	168	- - -	$2.70
OP-440020	168	- - -	$3.40
OP-440021	168	- - -	$4.20
OP-440023	168	- - -	$0.90
OP-440024	168	- - -	$1.40

PRICE INDEX

MODEL	PAGE	PCS/ CS	LIST PRICE
OP-440025	168	- - -	$20.90
OP-440026	168	- - -	$12.90
OP-440027	168	- - -	$5.90
OP-440028	168	- - -	$0.90
OP-440029	168	- - -	$0.90
OP-440030	168	- - -	$23.80
OP-440031	168	- - -	$29.90
OP-440033	168	- - -	$4.90
OP-440034	168	- - -	$2.00
OP-440035	168	- - -	$4.20
OP-440036	168	- - -	$13.90
OP-440037	168	- - -	$7.80
OP-440042	168	- - -	$10.00
OP-440043	168	- - -	$1.20
OP-440044	168	- - -	$11.80
OP-440045	165	- - -	$27.30
OP-440051	168	- - -	$23.20
OP-440052	169	- - -	$0.90
OP-440053	169	- - -	$6.00
OP-440054	169	- - -	$7.20
OP-440055	169	- - -	$21.00
OP-440056	169	- - -	$33.00
OP-440064	169	- - -	$8.90
OP-440065	169	- - -	$10.60
OP-450002	169	- - -	$2.70
OP-450003	169	- - -	$0.90
OP-450004	169	- - -	$12.20
OP-450005	169	- - -	$2.00
OP-450010	169	- - -	$9.60
OP-450011	169	- - -	$12.20
OP-450012	169	- - -	$1.40
OP-450013	169	- - -	$0.90
OP-450014	169	- - -	$2.70
OP-460001	169	- - -	$3.60
OP-460002	169	- - -	$14.70
OP-460003	169	- - -	$26.50
OP-460004	169	- - -	$5.90
OP-460005	169	- - -	$10.50
OP-460006	169	- - -	$35.40
OP-460006-BN	169	- - -	$47.90
OP-460008	169	- - -	$25.00
OP-460010	169	- - -	$94.40
OP-460011	169	- - -	$1.30
OP-460013	169	30	$29.70
OP-460019	169	- - -	$0.90
OP-460020	169	- - -	$14.70

MODEL	PAGE	PCS/ CS	LIST PRICE
OP-460021	169	- - -	$25.40
OP-460022	169	- - -	$4.80
OP-460024	169	- - -	$24.30
OP-460025	169	- - -	$1.70
OP-460026	169	- - -	$91.50
OP-460027	169	- - -	$24.30
OP-490001C	169	- - -	$1.40
OP-490001H	169	- - -	$1.40
OP-490002	169	- - -	$0.90
OP-490003	169	- - -	$8.40
OP-490004	166	- - -	$5.50
OP-490005	169	- - -	$0.90
OP-490006	169	- - -	$6.40
OP-490007	169	- - -	$12.60
OP-490008	169	- - -	$7.70
OP-490009	169	- - -	$22.50
OP-490010	161	- - -	$6.40
OP-490010-BN	161	- - -	$8.40
OP-490010-ORB	161	- - -	$9.50
OP-490011	169	- - -	$0.90
OP-490012C	169	- - -	$1.40
OP-490012H	169	- - -	$1.40
OP-490013C	169	- - -	$1.50
OP-490013H	169	- - -	$1.50
OP-490014	169	- - -	$0.90
OP-490015	169	- - -	$0.90
OP-490016C	169	- - -	$0.90
OP-490016H	169	- - -	$0.90
OP-490017	169	- - -	$7.20
OP-490018	169	- - -	$3.40
OP-490019	161	- - -	$3.10
OP-490021	169	- - -	$3.40
OP-490022	169	- - -	$0.90
OP-490023	169	- - -	$3.60
OP-490025	169	- - -	$1.40
OP-490026	161	- - -	$2.00
OP-490027	161	- - -	$3.40
OP-490028	169	- - -	$8.50
OP-490029	169	- - -	$1.50
OP-490030	169	- - -	$49.10
OP-490035	161	- - -	$8.30
OP-490035-BN	161	- - -	$9.60
OP-490035-ORB	161	- - -	$11.80
OP-490036	169	- - -	$0.90
OP-490038	169	- - -	$2.80
OP-490039	169	- - -	$0.90

MODEL	PAGE	PCS/ CS	LIST PRICE
OP-490040	169	- - -	$2.90
OP-490041	166	- - -	$1.50
OP-490042	169	- - -	$1.40
OP-490043	169	- - -	$0.90
OP-490044	169	- - -	$5.10
OP-490045	160	20	$111.20
OP-490051	169	100	$11.90
OP-490052	169	100	$11.90
OP-490055	161	- - -	$10.60
OP-490055-BN	161	- - -	$11.00
OP-490055-ORB	161	- - -	$12.90
OP-490056	161	- - -	$11.80
OP-490056-BN	161	- - -	$12.30
OP-490056-ORB	161	- - -	$14.00
OP-490057	169	- - -	$9.80
OP-490057-BN	169	- - -	$11.80
OP-490057-ORB	169	- - -	$12.30
OP-490058	161	- - -	$9.80
OP-490058-BN	161	- - -	$11.00
OP-490058-ORB	161	- - -	$12.90
OP-490059	161	- - -	$9.80
OP-490059-BN	161	- - -	$11.00
OP-490059-ORB	161	- - -	$12.90
OP-490060	161	- - -	$12.30
OP-490060-BN	161	- - -	$13.40
OP-490060-ORB	161	- - -	$14.50
OP-490061	161	- - -	$12.30
OP-490061-BN	161	- - -	$13.40
OP-490061-ORB	161	- - -	$14.50
OP-490062	161	- - -	$7.90
OP-490063	161	- - -	$6.90
OP-490064	161	- - -	$7.70
OP-490065	161	- - -	$6.90
OP-520001	170	- - -	$2.00
OP-520002	170	- - -	$2.70
OP-520003	170	- - -	$3.60
OP-520004	170	- - -	$3.40
OP-520005	170	- - -	$4.70
OP-520006	170	- - -	$12.90
OP-520007	170	- - -	$4.70
OP-520008	170	- - -	$20.90
OP-520009	170	- - -	$3.80
OP-520012	170	- - -	$5.60
OP-520015	170	- - -	$5.40
OP-530001	170	- - -	$3.60
OP-530003	170	- - -	$5.40

PRICE INDEX

MODEL	PAGE	PCS/ CS	LIST PRICE
OP-530004	170	- - -	$3.70
OP-530005	170	- - -	$5.60
OP-540004	170	- - -	$9.90
OP-540005	170	- - -	$10.20
OP-540006	170	- - -	$20.90
OP-560001	170	- - -	$2.20
OP-590001	170	- - -	$1.50
OP-590002	170	- - -	$6.60
OP-590003	170	- - -	$2.90
OP-630001	157	50	$30.50
OP-630002	157	50	$29.90
OP-630002-BN	157	50	$33.60
OP-630002-ORB	157	50	$34.40
OP-630004	158	50	$24.30
OP-630004-BN	157	50	$27.00
OP-630004-ORB	157	50	$27.90
OP-630005	158	- - -	$29.60
OP-630006	158	- - -	$32.00
OP-630007	157	- - -	$30.80
OP-630008	170	- - -	$38.60
OP-630009	170	- - -	$44.10
OP-630011	157	- - -	$21.00
OP-640001	170	- - -	$1.50
OP-640002	170	- - -	$13.10
OP-640007	170	50	$22.60
OP-640008	170	- - -	$10.80
OP-640014	153	50	$11.80
OP-640014-BN	153	50	$18.70
OP-640015	153	50	$17.40
OP-640015-BN	153	50	$24.00
OP-640017	160	60	$73.10
OP-640017-BN	160	60	$111.80
OP-640017-ORB	160	60	$114.10
OP-640018	153	50	$22.00
OP-640018-BN	153	50	$28.70
OP-640018-ORB	153	50	$31.20
OP-640019	153	50	$15.90
OP-640019-BN	153	50	$25.10
OP-640019-ORB	153	50	$26.80
OP-640020	170	- - -	$14.40
OP-640022	152	100	$24.50
OP-640022-BN	152	100	$37.20
OP-640022-ORB	152	100	$39.40
OP-640029	152	50	$29.00
OP-640029-BN	152	50	$41.00
OP-640029-ORB	152	50	$44.30

MODEL	PAGE	PCS/ CS	LIST PRICE
OP-640031	152	200	$13.20
OP-640033	153	25	$45.50
OP-640033-BN	153	25	$62.50
OP-640034	153	25	$37.20
OP-640034-BN	153	25	$53.50
OP-640035	151	70	$37.20
OP-640035-BN	151	70	$45.50
OP-640035-ORB	151	70	$49.40
OP-640037	151	- - -	$58.40
OP-640037-BN	151	- - -	$66.30
OP-640038	151	48	$33.10
OP-640039	151	48	$35.20
OP-640040	154	- - -	$60.60
OP-640040-BN	154	- - -	$68.80
OP-640041	151	- - -	$54.60
OP-640042	151	- - -	$57.40
OP-640043	154	- - -	$98.10
OP-640044	154	- - -	$99.10
OP-640045	170	- - -	$17.10
OP-640046	154	- - -	$25.40
OP-640047	152	- - -	$59.00
OP-640048	152	- - -	$23.20
OP-640053	152	- - -	$26.80
OP-640058	170	- - -	$1.20
OP-640063	154	- - -	$68.00
OP-640063-BN	154	- - -	$75.00
OP-640063-MB	154	- - -	$79.00
OP-660002	170	- - -	$42.80
OP-660003	170	- - -	$38.30
OP-660005	170	- - -	$47.40
OP-660007	170	- - -	$38.60
OP-660009	170	- - -	$48.90
P-1131B	150	12	$122.50
P-1131B-CP	150	12	$126.40
P-1131T	126	6	$174.80
P-1131T-BN	126	6	$215.70
P-1131T-MZ	126	6	$253.90
P-1131T-ORB	126	6	$232.60
P-1141T	126	6	$178.50
P-1141T-BN	126	6	$212.20
P-1141T-MB	126	6	$215.40
P-1171T	103	6	$176.80
P-1171T-BG	103	6	$313.95
P-1171T-BN	103	6	$224.60
P-1171T-MB	103	6	$235.83
P-1210	141	12	$98.10

MODEL	PAGE	PCS/ CS	LIST PRICE
P-1212	141	12	$92.30
P-1220	141	12	$94.80
P-1222	141	12	$91.10
P-1230	142	12	$133.50
P-1230-BN	142	12	$173.70
P-1231	142	12	$115.90
P-1232	142	12	$120.30
P-1232-BN	142	12	$151.30
P-1240	142	12	$126.90
P-1242	142	12	$119.08
P-1250	124	12	$141.70
P-1250-BN	124	12	$196.90
P-2000	140	12	$85.40
P-2002	140	12	$82.30
P-2002-BN	140	12	$125.00
P-2230T	90	12	$86.00
P-2240B	150	10	$33.90
P-2240T	122	10	$28.10
P-2240T-BN	122	10	$50.40
P-2240T-ORB	122	10	$69.80
P-2270T	97	12	$85.20
P-2270T-BN	97	12	$94.20
P-2270T-MB	97	- - -	$81.50
P-2280T	103	12	$84.50
P-2280T-BN	103	12	$94.20
P-2280T-MB	103	12	$95.70
P-2290T	109	12	$82.90
P-2290T-BN	109	12	$92.40
P-2291T	114	12	$83.70
P-2291T-BN	114	12	$93.30
P-2291T-MB	114	12	$97.60
P-3210	143	6	$130.10
P-3220	143	6	$127.80
P-3230	143	6	$155.10
P-3230-BN	143	6	$205.70
P-3240	143	12	$148.20
P-3250	124	6	$159.70
P-3250-BN	124	6	$212.20
P-4420	125	12	$157.20
P-4420-BN	125	12	$273.20
P-4430	125	12	$152.80
P-4430-BN	125	12	$263.20
P-4430-E1.5	125	12	$151.40
P-4430-E1.5-BN	125	12	$258.30
P-4430-MB	125	12	$279.76
P-4430-MZ	125	12	$304.60

PRICE INDEX

MODEL	PAGE	PCS/ CS	LIST PRICE
P-4430-ORB	125	12	$292.50
P-4440	125	6	$179.40
P-4440-BN	125	6	$276.70
P-4530	98	6	$150.60
P-4530-BN	98	6	$260.60
P-4530-MB	98	6	$260.60
P-4550	97	6	$367.80
P-4550-BN	97	6	$469.90
P-4550-MB	97	6	$482.30
T-2300	137	12	$93.40
T-2300-BN	137	12	$131.10
T-2300-LS	137	12	$90.40
T-2300-MZ	137	12	$140.20
T-2300-ORB	137	12	$135.50
T-2300-VC	139	12	$117.75
T-2300-VC-BN	139	12	$154.50
T-2301	137	12	$66.60
T-2301-ADA	138	- - -	$276.10
T-2301-BN	137	12	$88.80
T-2301-ORB	137	12	$91.00
T-2302	138	12	$77.70
T-2302-BN	138	12	$108.60
T-2302-ORB	138	12	$108.90
T-2302-VC	139	12	$101.75
T-2302-VC-BN	139	12	$132.00
T-2303	138	12	$55.20
T-2303-ADA	138	4	$237.40
T-2303-ADA-BN	138	- - -	$306.80
T-2303-BN	138	12	$73.40
T-2303-ORB	138	12	$92.00
T-2306	139	12	$106.10
T-2306-BN	139	12	$144.50
T-2307	139	12	$90.90
T-2307-BN	139	12	$118.80
T-2310	137	12	$93.50
T-2310-BN	137	12	$129.20
T-2312	139	12	$75.00
T-2330	89	12	$107.90
T-2330-BN	89	12	$140.00
T-2330-MB	89	12	$147.00
T-2331	89	12	$68.20
T-2331-BN	89	12	$89.60
T-2332	89	12	$83.10
T-2332-BN	89	12	$107.20
T-2332-MB	89	12	$112.56
T-2333	89	12	$63.50

MODEL	PAGE	PCS/ CS	LIST PRICE
T-2333-BN	89	12	$64.70
T-2334	90	12	$138.50
T-2334-7S	90	12	$143.00
T-2334-7S-BN	90	12	$176.00
T-2334-7S-MB	90	12	$208.00
T-2334-BN	90	12	$171.80
T-2335	90	12	$107.60
T-2335-BN	90	12	$130.80
T-2340	121	12	$108.90
T-2340-BN	121	12	$146.90
T-2340-MZ	121	12	$169.50
T-2340-ORB	121	12	$145.80
T-2342	121	12	$91.80
T-2342-BN	121	12	$122.70
T-2342-MZ	121	12	$140.70
T-2342-ORB	121	12	$122.80
T-2343	122	12	$56.90
T-2343-BN	122	12	$75.70
T-2350	121	12	$111.20
T-2350-BN	121	12	$158.30
T-2351	121	12	$74.40
T-2352	122	12	$89.40
T-2352-BN	122	12	$121.90
T-2353	122	12	$123.10
T-2353-BN	122	12	$165.00
T-2354	122	12	$85.80
T-2354-BN	122	12	$112.60
T-2360	123	12	$109.60
T-2360-BN	123	12	$149.30
T-2362	123	12	$97.50
T-2362-BN	123	12	$124.20
T-2363	123	12	$62.50
T-2370	95	12	$118.10
T-2370-BN	95	12	$152.20
T-2370-MB	95	12	$153.70
T-2371	95	12	$82.90
T-2371-BN	95	12	$106.00
T-2372	95	12	$95.40
T-2372-4S	95	- - -	$96.10
T-2372-BN	95	12	$118.90
T-2372-MB	95	12	$118.30
T-2373	96	12	$64.90
T-2373-BN	96	12	$82.60
T-2374	96	12	$152.70
T-2374-7S	97	12	$158.00
T-2374-7S-BN	97	12	$204.00

MODEL	PAGE	PCS/ CS	LIST PRICE
T-2374-7S-MB	97	12	$208.00
T-2374-BN	96	12	$200.00
T-2374-MB	96	12	$195.50
T-2375	97	12	$115.50
T-2375-BN	97	12	$145.50
T-2375-MB	97	12	$150.00
T-2380	101	12	$107.90
T-2380-BN	101	12	$136.50
T-2380-MB	101	12	$143.30
T-2381	101	12	$67.20
T-2381-BN	101	12	$90.30
T-2382	101	12	$86.60
T-2382-6RL	101	12	$148.40
T-2382-BN	101	12	$107.90
T-2382-MB	101	12	$113.60
T-2383	103	12	$53.70
T-2383-BN	103	12	$64.90
T-2384	102	12	$142.30
T-2384-6RL	102	12	$170.80
T-2384-6RL-BN	102	12	$227.60
T-2384-7S	102	12	$145.00
T-2384-7S-BN	102	12	$184.00
T-2384-7S-MB	102	12	$195.00
T-2384-BN	102	12	$178.50
T-2384-MB	102	12	$182.90
T-2385	102	12	$105.40
T-2385-BN	102	12	$130.70
T-2385-MB	102	12	$138.00
T-2386	103	12	$123.70
T-2386-BN	103	12	$153.90
T-2387	103	12	$101.00
T-2387-BN	103	12	$123.60
T-2390	106	12	$116.40
T-2390-BN	106	12	$150.10
T-2391	106	12	$84.30
T-2391-BN	106	12	$101.80
T-23910	113	12	$135.60
T-23910-BN	113	12	$177.30
T-23910-MB	113	12	$177.40
T-23911	113	12	$113.60
T-23911-BN	113	12	$140.70
T-23911-MB	113	12	$144.90
T-23912	113	12	$115.80
T-23912-BN	113	12	$140.70
T-23912-MB	113	12	$144.90
T-23913	114	12	$78.10

PRICE INDEX

MODEL	PAGE	PCS/ CS	LIST PRICE
T-23913-BN	114	12	$95.70
T-23913-MB	114	12	$100.40
T-23914	114	12	$170.50
T-23914-BN	114	12	$214.60
T-23914-MB	114	12	$212.50
T-23915	114	12	$136.50
T-23915-BN	114	12	$162.80
T-23915-MB	114	12	$171.00
T-23916	114	12	$114.50
T-23916-BN	114	12	$140.30
T-23916-MB	114	12	$140.30
T-2392	106	12	$92.40
T-2392-BN	106	12	$115.10
T-2393	109	12	$62.10
T-2393-BN	109	12	$75.20
T-2393-MB	109	12	$81.20
T-2394	107	12	$122.50
T-2394-6	107	12	$136.90
T-2394-6-BN	107	12	$181.50
T-2394-BN	107	12	$158.00
T-2395	107	12	$101.40
T-2395-6	108	12	$110.10
T-2395-6-BN	108	12	$142.50
T-2395-6L	108	12	$140.10
T-2395-6L-BN	108	12	$180.00
T-2395-BN	107	12	$127.00
T-2395-MB	107	12	$134.00
T-2396	108	12	$160.30
T-2396-BN	108	12	$186.80
T-2397	108	12	$127.50
T-2397-BN	108	12	$151.70
T-2398	109	12	$168.50
T-2398-6	109	12	$176.00
T-2398-6-BN	109	12	$217.70
T-2398-BN	109	12	$197.10
T-2398-MB	109	12	$202.70
TD-2300-ADA	137	6	$230.00
TD-2300-ADA-BN	137	6	$338.70
TD-2300-ADA-MB	137	- - -	$358.50
TD-2302-ADA	138	6	$209.10
TD-2302-ADA-BN	138	6	$320.40
TD-2302-ADA-MB	138	6	$330.50
TD-2370-ADA	95	6	$246.90
TD-2370-ADA-BN	95	6	$365.20
TD-2370-ADA-MB	95	6	$383.60
TD-2372-ADA	96	6	$228.70

MODEL	PAGE	PCS/ CS	LIST PRICE
TD-2372-ADA-BN	96	6	$337.90
TD-2372-ADA-MB	96	6	$354.40
TD-2380-ADA	101	6	$248.30
TD-2380-ADA-BN	101	6	$367.80
TD-2380-ADA-MB	101	6	$386.30
TD-2382-ADA	102	6	$227.70
TD-2382-ADA-BN	102	6	$336.90
TD-2382-ADA-MB	102	6	$354.40
TD-2390-ADA	106	6	$257.50
TD-2390-ADA-BN	106	6	$383.20
TD-2390-ADA-MB	106	6	$402.80
TD-23910-ADA	113	6	$256.50
TD-23910-ADA-BN	113	6	$383.20
TD-23910-ADA-MB	113	6	$402.80
TD-23912-ADA	113	6	$233.90
TD-23912-ADA-BN	113	6	$349.20
TD-23912-ADA-MB	113	6	$366.70
TD-2392-ADA	107	6	$230.60
TD-2392-ADA-BN	107	6	$343.80
TD-2392-ADA-MB	107	6	$364.70
V-2300B	144	12	$72.70
V-2300B-B	144	12	$68.50
V-2300B-EP90D	144	12	$85.60
V-2300B-EP90U	144	12	$85.60
V-2301B	144	12	$83.20
V-2301B-B	144	12	$83.10
V-2302B	144	12	$82.70
V-2302B-B	144	12	$84.70
V-2303B	145	12	$85.20
V-2303B-B	145	12	$84.80
V-2304B	145	6	$104.60
V-2304B-B	145	6	$104.50
V-2305B	145	12	$75.60
V-2305B-B	145	12	$76.00
V-2306B	145	6	$102.80
V-2306B-B	145	6	$99.70
V-2307B	145	12	$74.50
V-2307B-B	145	12	$73.90
V-2308B	146	12	$78.10
V-2308B-B	146	12	$75.80
V-2309B	146	6	$97.90
V-2309B-B	146	6	$96.40
V-2309B-EP90D	146	6	$109.60
V-2309B-EP90U	146	6	$109.60
V-2311B	146	12	$88.00
V-2311B-B	146	12	$86.40

MODEL	PAGE	PCS/ CS	LIST PRICE
V-2312B-B	147	6	$99.40
V-2315B	147	12	$84.20
V-2315B-B	147	12	$82.20
V-2316B	147	12	$71.30
V-2316B-B	147	12	$67.90
V-2400B	147	12	$56.40
V-2400B-B	147	12	$56.60
V-2402B	147	12	$75.80
V-2402B-B	147	12	$77.00
V-2403B	148	12	$66.80
V-2403B-B	148	12	$66.10
V-2404B	148	6	$96.60
V-2404B-B	148	6	$96.30
V-2405B	148	12	$59.50
V-2405B-B	148	12	$60.30
V-2407B	148	12	$59.60
V-2407B-B	148	12	$58.60
V-2408B	148	12	$69.50
V-2408B-B	148	12	$67.50
V-2410B	149	- - -	$97.80
V-2411B	149	12	$84.60
V-2412B	149	6	$92.10
V-2415B	149	12	$68.30
V-2416B	149	12	$54.70
V-2416B-B	149	12	$54.20
V-2500B	150	12	$131.60
VT-2300-RP	140	6	$235.90
VT-2302-RP	140	6	$217.20

PRICE INDEX

MODEL	PAGE	PCS/ CS	LIST PRICE
0005-H1/2P	223	6	$66.60
0006-H1/2C	223	6	$48.50
0006-H1/2H	223	6	$48.90
0007-1/2	223	6	$60.00
0007-H1/2	223	6	$63.70
0031-H1/2C	223	6	$88.20
0031-H1/2H	223	6	$88.20
0031-H1/2P	223	6	$88.20
0033-1/2CV-02	223	6	$127.00
0033-1/2HV-02	223	6	$127.00
0033-1/2PV-02	223	6	$127.00
0045-LE0	182	6	$241.20
0046-LE0	184	6	$245.20
0047-SA	182	6	$141.60
0047-SA1	182	6	$146.00
0047-SL	182	6	$129.30
0047-SLE0	182	6	$138.40
0047-TA	182	6	$137.60
0047-TA1	182	6	$145.30
0047-TA3	182	6	$157.00
0047-TA4	182	6	$157.50
0047-TLE0	182	6	$138.40
0047-TLE17	182	6	$162.30
0047-UA	182	6	$142.10
0047-UA1	182	6	$151.30
0047-UA2	183	6	$155.20
0047-UA3	183	6	$161.00
0047-UA4	183	6	$155.30
0047-ULE0	183	6	$139.30
0047-ULE17	183	6	$160.10
0047-ULE20	190	- - -	$199.40
0047-ULE3	183	6	$158.80
0047-ULE60	174	4	$482.80
0047-ULE60-AD0	174	4	$565.40
0047-ULE60-AD1	174	4	$574.70
0048-SA	185	6	$156.10
0048-SLE0	185	6	$163.90
0048-TA	184	6	$155.80
0048-TA1	184	6	$161.90
0048-TA2	184	6	$161.20
0048-TA3	184	6	$169.00
0048-TA4	184	6	$163.00
0048-TLE0	185	6	$147.50
0048-UA	185	6	$167.00
0048-UA1	185	6	$173.60
0048-UA2	185	6	$174.10
0048-UA3	185	6	$180.60
0048-UA4	185	6	$175.80
0048-UA6	185	6	$174.70

MODEL	PAGE	PCS/ CS	LIST PRICE
0048-ULE0	185	6	$161.70
0048-ULE3	185	6	$175.30
0050-ULERC	188	6	$172.00
0050-URC	188	6	$167.00
0050-URC-QI	188	6	$191.50
0051-TRC	188	6	$152.00
0051-URC	188	6	$137.00
0054-ULE-Q	188	6	$210.00
0054-ULE-QI	188	6	$258.90
0054-ULERC-Q	188	6	$186.00
0054-ULERC-QI	188	6	$201.30
0054-U-Q	188	6	$206.70
0054-U-QI	188	6	$255.70
0054-URC-Q	188	6	$185.70
0054-URC-QI	188	6	$205.70
0054-YELSRC-Q	188	6	$259.40
0054-YRC-Q	188	6	$236.20
0072-ELS17	181	- - -	$213.00
0072-ELS19	181	- - -	$230.90
0084-A	194	6	$110.20
0084-A1	194	6	$113.60
0084-A17	195	6	$125.50
0084-A3	194	6	$117.90
0084-A4	194	6	$118.40
0084-A6	194	6	$121.20
0084-EL17	195	6	$154.20
0084-ELS17	195	6	$153.00
0084-ELS17-E0.5	195	6	$165.70
0084-H	195	6	$113.90
0084-LE0	194	6	$112.40
0084-LE17	195	6	$126.30
0094-A	195	6	$99.00
0094-A1	194	6	$104.30
0094-A17	194	6	$118.30
0094-A3	194	6	$112.10
0094-ELS17	194	6	$145.70
0094-H	195	6	$99.60
0094-H1	195	6	$105.70
0094-H3	195	6	$113.50
0094-LE0	195	6	$97.70
0094-LE17	195	6	$111.50
0112-AL	228	60	$20.80
0120-A	178	6	$151.50
0120-A3	178	6	$170.40
0120-L	178	6	$135.10
0121-A	179	6	$164.40
0122-A	179	6	$166.40
0122-ELS17	180	6	$202.00
0122-ELS19	180	6	$216.60

MODEL	PAGE	PCS/ CS	LIST PRICE
0122-LE1	178	6	$141.50
0122-LE17	178	6	$173.70
0122-LE6	179	6	$162.60
0123-A	179	6	$180.00
0123-A07	179	6	$206.60
0123-LE1	179	6	$174.20
0123-LE2	179	6	$191.50
0123-LE6	179	6	$175.80
0125-A	180	6	$144.40
0126-A	180	6	$163.10
0127-A	180	6	$162.60
0127-LE1	180	6	$151.20
0127-LE6	180	6	$170.80
0128-A	180	6	$180.70
0128-LE1	180	6	$168.00
0128-LE6	180	6	$187.60
0184-LE0	199	6	$119.80
0194-LE0	199	6	$102.10
0206	213	6	$67.50
0208	213	6	$79.50
0209	213	6	$92.00
0210	214	6	$81.80
0210-Q	214	6	$83.60
0211	214	6	$155.30
0211-Q	214	6	$151.30
0239-AP	204	6	$65.40
0239-P	204	6	$59.40
0255-AC	204	6	$85.90
0255-AH	204	6	$88.40
0255-AP	204	6	$85.90
0255-AVC	204	6	$89.40
0255-AVP	204	6	$89.40
0255-C	204	6	$78.30
0255-H	204	6	$78.30
0255-P	204	6	$78.30
0280-AC	192	6	$111.40
0280-AC17	192	6	$121.30
0280-AH	192	6	$111.40
0280-ELS19	192	6	$223.60
0280-LE20	190	- - -	$136.30
0281-AC	192	6	$96.30
0281-AH	192	6	$96.30
0282	193	6	$87.10
0284-A-Q	193	6	$169.00
0285-A-Q	193	6	$183.40
0286-AC	192	6	$84.70
0286-AH	192	6	$83.90
0287-A17	193	6	$165.20
0287-ELS17	193	6	$194.40

PRICE INDEX

MODEL	PAGE	PCS/ CS	LIST PRICE
0287-ELS19	193	- - -	$210.40
0287-LE17	193	6	$166.80
0287-LE18	193	6	$168.90
0287-LE20	190	- - -	$177.00
0289-A	193	6	$148.40
0331-1/2	224	6	$82.50
0331-3/8	224	6	$76.90
0331-L1/2	224	6	$82.80
0331-L3/8	224	6	$81.60
0331-LV3/8	224	6	$84.90
0331-V1/2	224	6	$85.80
0333-1/2	224	6	$83.00
0333-3/8	224	6	$78.00
0333-L1/2	224	6	$83.20
0333-L3/8	224	6	$80.10
0333-LV1/2	224	6	$86.50
0334-1/2	215	6	$77.00
0335-1/2	215	6	$84.40
0335-V1/2	215	6	$87.70
0336-N2-1/2	224	6	$85.60
0336-N2-3/8	224	6	$83.50
0342-1/2	227	24	$21.60
0342-1/2VB	227	12	$70.70
0342-3/8	227	24	$20.80
0355-AN2C	204	6	$122.10
0355-AN2H	204	6	$122.10
0355-AN2P	204	6	$122.10
0355-AVN2C	204	6	$125.30
0355-AVN2C-WD	204	- - -	$141.80
0355-AVN2P	204	6	$125.30
0356-AN2C	204	6	$145.00
0356-AN2P	204	6	$145.00
0356-AVN2P	204	6	$145.00
0360	220	6	$103.20
0361	220	36	$89.00
0362	220	36	$83.90
0364-L	219	6	$194.00
0364-LV	219	6	$190.30
0364-N2	219	6	$169.60
0365-L	219	6	$172.30
0365-LV	219	6	$175.90
0366-HX8	221	6	$284.00
0366-HX8V	221	6	$290.50
0366-HX8VWB	221	6	$339.50
0366-HX8WB	221	6	$335.60
0366-HX8WBD	221	6	$336.90
0366-L	219	6	$171.20
0366-LV	219	6	$169.90
0366-N2	221	6	$162.10

MODEL	PAGE	PCS/ CS	LIST PRICE
0366-N2HX8WB	221	6	$316.60
0376	222	12	$39.50
0377	222	12	$65.90
0393	191	6	$89.20
0396	191	6	$124.50
0397	191	10	$143.50
0398-ULE0	187	6	$85.20
0398-ULE20	190	- - -	$143.30
0398-ULEEX0	187	6	$103.30
0399	205	8	$485.70
0399-AC	205	8	$518.00
0425	222	40	$31.20
0426	222	40	$23.90
0455	198	8	$126.70
0465	197	6	$91.40
0465-5	197	6	$101.40
0465-LE	197	6	$91.40
0466	197	6	$76.80
0466-5	197	6	$84.30
0468	197	6	$107.00
0468-5	197	6	$112.50
0469	198	6	$110.50
0469-5	198	6	$121.40
0470	198	6	$107.00
0470-5	198	6	$114.80
0471-RC	198	6	$158.90
0477	213	4	$124.70
0477-RC	213	4	$127.70
0555	225	36	$48.00
0555-D	225	36	$50.20
0575-1/2	225	6	$41.50
0575-1/2CP	225	6	$69.00
0576-1/2	225	6	$43.80
0576-1/2CP	225	6	$69.00
0576-3/4	225	6	$41.50
0607-C1/2	225	6	$47.70
0607-C3/4	225	6	$47.60
0640	175	4	$392.90
0641	175	4	$399.00
0642-LE0	176	6	$125.60
0650-0	178	6	$122.40
0650-17	178	6	$138.30
0660	176	6	$109.20
0661	177	6	$104.20
0808-Z	206	8	$119.10
0826	206	8	$135.90
0850	206	8	$121.80
0868	207	8	$215.70
0868-Z	207	8	$190.20

MODEL	PAGE	PCS/ CS	LIST PRICE
0897	206	8	$165.40
0905	207	8	$111.10
0908	207	8	$167.10
0908-Z	207	8	$133.10
0926	207	8	$144.30
0950	208	8	$138.70
0951	208	8	$160.20
0961	208	8	$224.60
0968	208	8	$230.60
0968-Z	208	8	$188.30
0971	208	8	$257.80
0971-Z	208	8	$232.70
0997	207	8	$176.90
1008-B	236	1	$3.00
1011-N	236	1	$9.00
1012-N	236	1	$9.80
1109	227	12	$43.60
1109-BP	227	12	$58.20
1109-BPLG	227	12	$53.60
1109-LG	227	12	$42.10
1125-A	203	6	$177.00
1125-DA	203	6	$211.60
1130	226	6	$128.40
1131-B	226	6	$86.20
1132-B	226	6	$97.30
1133-A	202	6	$127.10
1133-DLE	202	6	$164.20
1133-LE	202	6	$131.80
1137-A	201	6	$133.10
1137-AELS	201	6	$152.30
1137-DA	201	6	$169.40
1137-DAEL	201	6	$197.80
1137-DAELS	201	6	$183.70
1137-DLE	201	6	$163.10
1137-LE	201	6	$130.00
1138-A	201	6	$142.60
1138-LE	201	6	$136.60
1167-AV	202	6	$263.00
1172-11AELS-Q	203	6	$215.40
1172-ELS17	181	6	$214.20
1172-ELS17-E0.5	181	6	$223.30
1172-ELS18	181	6	$222.90
1172-ELS19	181	- - -	$230.90
1172-LE6-Q	181	6	$180.40
1173-LE6-Q	181	6	$191.70
1177-A	202	6	$161.00
1177-DA	202	6	$197.40
1177-DLE	202	6	$189.60
1177-LE	202	6	$152.30

PRICE INDEX

MODEL	PAGE	PCS/ CS	LIST PRICE
1178-A	202	6	$227.90
1178-DA	202	6	$230.20
1178-DLE	202	6	$222.40
1178-LE	202	6	$188.40
1240	214	6	$108.20
1246	215	6	$102.80
1379	212	6	$258.80
1379-L	212	6	$171.90
1380	212	6	$273.20
1380-L	212	6	$191.00
1555	217	6	$111.90
157-I	236	1	$33.30
1645	216	6	$108.30
1645-17	216	6	$119.90
1645-CO	216	6	$118.70
1645-PR	216	6	$116.30
1645-S	216	6	$146.50
1655	217	6	$114.00
1655-P	217	6	$115.10
1655-X	217	6	$114.00
1655-X1817	217	6	$145.40
1665-WX	217	6	$129.90
1665-XP17	217	6	$137.40
1675	216	6	$136.30
1675-S	216	6	$162.80
1960-A	200	6	$138.30
1960-A-E1.2	200	6	$138.30
1960-AEH	200	6	$164.50
1960-DA	200	6	$174.20
1960-DAEH	200	6	$198.40
2056-SPT1109	236	1	$5.50
2095	205	6	$499.00
2095-LM	205	6	$409.00
2096	205	6	$515.00
2096-LM	205	6	$425.00
2098	205	6	$432.00
2098-AC	205	6	$463.00
2098-AC-LM	205	6	$350.00
2098-BG	205	6	$477.00
2098-BN	205	6	$453.00
2098-LM	205	6	$319.00
2098-MB	205	6	$477.00
2099	205	5	$463.00
2099-AC	205	5	$463.00
2099-BG	205	5	$508.00
2099-BN	205	5	$484.00
2099-MB	205	5	$508.00
2126-A	236	1	$7.20
268-TVR	236	1	$3.70

MODEL	PAGE	PCS/ CS	LIST PRICE
2985-J	236	1	$35.00
3034-1/2-02	236	1	$19.50
3042-A	236	1	$29.10
3042-P	236	1	$9.40
3061-AZ1/2	236	1	$27.80
3105	227	12	$24.30
3105-BP	227	12	$26.40
3106	227	12	$47.50
312-10N	236	1	$17.10
3127-AN1	203	6	$288.00
3127-AVN1	203	6	$288.30
3137-AN2	202	6	$217.50
3137-AVN2	202	6	$220.70
3137-DAN2	202	6	$251.30
3137-DAVN2	202	6	$254.30
3145-D	236	1	$66.00
3154-Z	236	1	$16.40
3362	236	1	$32.70
390	236	1	$7.80
510	236	1	$7.90
521-B	236	1	$9.90
524-B	236	1	$7.10
530	236	1	$6.20
6056	209	8	$94.10
6076	209	8	$157.10
6086-Z	209	8	$118.50
61-LC	236	1	$3.90
61-LU	236	1	$2.80
6266	209	8	$127.50
7074-L	236	1	$21.20
714-WT-02	236	1	$11.20
7255-M	236	1	$3.50
731-K	236	1	$26.90
781-A	236	1	$16.70
80047-TA3	182	6	$167.20
80047-TLE0	182	6	$150.70
80047-UA	182	6	$157.70
80047-UA1	182	6	$166.60
80047-UA3	183	6	$170.20
80047-ULE0	174	6	$161.10
80047-ULE3	174	6	$170.30
80047-ULE60	174	4	$492.30
80047-ULE60-AD0	174	4	$625.70
80047-ULE60-AD1	174	4	$623.60
80047-ULE60-AD23	174	4	$638.10
80047-ULE60-AD3	174	4	$618.10
80047-ULE62-AD1	174	4	$607.92
80048-TA	184	6	$158.90
80048-UA	185	6	$170.30

MODEL	PAGE	PCS/ CS	LIST PRICE
80048-ULE0	185	6	$171.90
80048-ULE3	185	6	$188.60
80050-U-I	188	6	$256.10
80051-ULERC	188	6	$142.20
80054-U-I	188	6	$269.60
80084-A	194	6	$121.50
80084-A17	195	6	$135.40
80084-AELS	194	6	$146.70
80084-ELS17	196	6	$164.00
80084-H	195	6	$109.96
80084-LE0	195	6	$121.40
80084-LE17	195	6	$136.00
80122-A	179	6	$173.90
80122-A07	179	6	$201.60
80122-A18	179	- - -	$203.10
80122-ELS17	179	6	$212.60
80123-A	179	6	$192.20
80286-AC	192	6	$93.10
80287-A17	193	6	$163.20
80465	197	6	$93.70
80466	197	6	$82.70
80642-LE0	176	6	$144.10
80642-LE1	176	6	$159.40
80805	206	8	$113.40
80826	206	8	$143.90
80850	206	8	$134.10
80868	207	8	$223.30
80868-C3	207	8	$352.10
80868-L3	207	8	$334.50
80868-L3-BN	207	8	$404.10
80868-Z	207	8	$205.40
80868-ZL3-BN	207	8	$341.38
80897	206	8	$168.50
80897-L3	206	8	$243.80
80905	207	8	$124.20
80926	207	8	$151.60
80950	208	8	$148.40
80968	208	8	$233.30
80968-Z	208	8	$198.80
80971	208	8	$266.40
80971-Z	208	8	$228.80
80997	207	8	$179.30
81125-A	203	6	$182.00
81125-DA	203	6	$212.10
81137-A	201	6	$135.90
81137-AELS	201	6	$156.50
81137-DA	201	6	$174.80
81137-DAELS	201	6	$201.10
81137-DLE	201	6	$176.40

PRICE INDEX

MODEL	PAGE	PCS/ CS	LIST PRICE
81137-LE	201	6	$139.20
81172-D12AL1	203	6	$330.70
81172-D12AL1-BN	203	6	$388.70
85-FW	236	1	$1.30
990-L	236	1	$6.30
CS-13001C	236	1	$22.80
CS-13001H	236	1	$22.80
CS-13001P	236	1	$23.90
CS-13002C	236	1	$15.70
CS-13002H	236	1	$15.70
CS-13003P	236	1	$6.10
CS-13004C	236	- - -	$122.00
CS-13004H	236	- - -	$124.50
CS-14001C	236	1	$51.30
CS-14001H	237	1	$49.90
CS-14001P	237	1	$52.80
CS-14002C	237	1	$55.50
CS-14002H	237	1	$54.90
CS-14002P	237	1	$56.00
CS-15001	237	1	$17.70
CS-19001C	181	1	$35.40
CS-19001H	181	1	$35.40
CS-19002C	178	1	$33.10
CS-19002H	178	1	$33.10
CS-19003C	181	1	$43.60
CS-19003H	181	1	$43.60
CS-19004C	178	1	$36.50
CS-19004H	178	1	$36.50
CS-19005	237	- - -	$57.60
CS-19006	237	- - -	$57.60
CS-19007C	176	- - -	$15.10
CS-19007H	176	- - -	$15.10
CS-22001	178	1	$73.20
CS-22002	178	- - -	$41.10
CS-22003	178	- - -	$45.00
CS-22004	187	- - -	$45.00
CS-22005	187	- - -	$47.90
CS-23002	237	- - -	$98.50
CS-25001	237	1	$36.40
CS-34001C	235	- - -	$32.70
CS-34001H	235	- - -	$31.40
CS-34001V	235	- - -	$26.20
CS-39001	237	1	$11.10
CS-39002	235	- - -	$53.40
CS-39003	235	- - -	$26.20
CS-39004	237	1	$38.10
CS-39005C	237	1	$13.10
CS-39005H	237	1	$13.10
CS-42001	237	- - -	$36.90

MODEL	PAGE	PCS/ CS	LIST PRICE
CS-42002	189	100	$38.70
CS-42003	189	100	$35.00
CS-42004	189	100	$43.80
CS-42005	176	16	$87.10
CS-42006	176	- - -	$87.10
CS-42010	177	- - -	$14.10
CS-42011	237	- - -	$23.10
CS-42012	237	- - -	$13.70
CS-42013	177	- - -	$85.40
CS-42014	177	- - -	$18.80
CS-42015	237	- - -	$10.20
CS-42016	237	- - -	$30.00
CS-42017	177	- - -	$9.90
CS-42018	177	- - -	$36.20
CS-42019	177	- - -	$46.60
CS-42020	237	- - -	$14.00
CS-42026	237	- - -	$1.20
CS-42027	237	- - -	$75.00
CS-42028	237	- - -	$21.90
CS-42032	237	- - -	$11.50
CS-42033	237	- - -	$26.70
CS-43001	237	1	$70.00
CS-43005	237	- - -	$10.70
CS-43006	237	- - -	$10.70
CS-43007	237	- - -	$3.40
CS-43008	237	- - -	$5.70
CS-43009	237	1	$63.20
CS-43013	237	- - -	$15.80
CS-44001	237	- - -	$22.50
CS-44002	237	1	$4.50
CS-45002	226	- - -	$43.70
CS-45003	226	- - -	$17.10
CS-46001	237	- - -	$2.80
CS-47001	237	- - -	$6.20
CS-48001	237	- - -	$22.10
CS-49003	237	- - -	$16.20
CS-49004	237	- - -	$13.80
CS-49005	237	- - -	$10.60
CS-49007	237	- - -	$9.50
CS-49008	237	- - -	$7.30
CS-49009	237	- - -	$11.50
CS-49011	178	- - -	$4.00
CS-49012	178	- - -	$4.50
CS-49013	237	- - -	$5.40
CS-49014	237	- - -	$4.30
CS-49015	237	1	$7.90
CS-49016C	235	1	$39.10
CS-49016H	235	1	$39.10
CS-49016P	235	1	$39.10

MODEL	PAGE	PCS/ CS	LIST PRICE
CS-49017C	235	1	$41.70
CS-49017H	235	1	$40.50
CS-49018C	238	- - -	$2.30
CS-49018H	238	- - -	$2.30
CS-49019	238	- - -	$1.00
CS-49020	238	- - -	$2.30
CS-49026	238	- - -	$4.40
CS-49027	238	- - -	$3.60
CS-49029	187	- - -	$3.80
CS-49032	238	2	$16.50
CS-52001	238	- - -	$6.90
CS-53001	238	- - -	$5.10
CS-53002	238	- - -	$6.80
CS-53003	238	- - -	$8.10
CS-53004	238	- - -	$10.10
CS-55004	238	- - -	$27.10
CS-63003	238	- - -	$40.40
CS-63004	238	1	$298.30
CS-63005	238	- - -	$43.60
CS-65001	189	24	$66.50
CS-65002	189	24	$49.00
CS-66001	218	30	$39.00
CS-66001-BN	218	30	$42.70
CS-66002	218	30	$41.10
CS-66002-BN	218	30	$46.50
CS-66003	218	30	$35.30
CS-66003-BN	218	30	$36.90
CS-66004	218	30	$37.30
CS-66004-BN	218	30	$38.50
G-1043	238	1	$11.80
G-1043-C	236	1	$28.70
G-128-52	238	2	$2.30
G-1548-ET	238	1	$34.90
G-1588-CT	238	1	$19.20
G-1748-88W	228	- - -	$16.30
G-195-DST9	238	1	$9.20
G-2090-S	238	1	$30.20
G-21	238	1	$10.20
G-2115-TP	238	1	$8.80
G-218-A	238	1	$16.50
G-284	238	1	$12.50
G-285-AZ	238	1	$13.60
G-2887	238	1	$110.90
G-29-A	238	1	$16.10
G-3009-A	238	1	$36.60
G-3036-A	236	1	$66.10
G-30-C	238	1	$14.60
G-3113-6	238	1	$32.90
G-3131	238	1	$75.40

PRICE INDEX

MODEL	PAGE	PCS/ CS	LIST PRICE
G-3359-A	238	1	$16.00
G-392	238	1	$20.40
G-398-C	238	1	$9.60
G-398-H	238	1	$9.60
G-4147-C	235	1	$35.00
G-4147-H	235	1	$35.00
G-4149-C	178	1	$37.70
G-4149-H	178	1	$37.70
G-454-EL	235	1	$11.90
G-454-ER	235	1	$11.90
G-458-KL	235	1	$19.20
G-458-KR	235	1	$19.20
G-508-C	235	1	$13.10
G-508-D	235	1	$13.10
G-508-H	235	1	$13.10
G-518-C	238	1	$18.40
G-518-H	238	1	$18.60
G-520-W	238	1	$6.00
G-521-BWD	238	1	$9.90
G-523-C	235	1	$7.10
G-523-H	235	1	$7.10
G-5355-S	238	1	$12.40
G-6928-V	238	1	$47.80
G-7114-V	238	1	$47.90
G-7116-V	238	1	$47.40
G-7233	238	1	$38.50
G-7237	238	1	$25.60
G-7237-477	238	1	$37.20
G-756-E	238	1	$3.10
G-83-ACZ	238	1	$12.60
G-83-AZ	238	1	$24.30
G-913-A	238	1	$7.70
G-914-SA	238	1	$8.30
G-94-F	238	1	$3.10
G-95-A	239	1	$4.00
G-97	239	1	$3.50
K-2-CT	235	1	$36.80
K-2-DT	235	1	$65.30
K-351-C	235	1	$45.20
K-351-H	235	1	$45.20
K-352-C	235	1	$35.40
K-352-H	235	1	$35.40
K-361	236	1	$44.20
K-3-CT	235	1	$24.50
K-3-DT	235	1	$25.30
K-454-C	235	1	$13.80
K-454-H	235	1	$13.80
PF-1043-A	239	1	$4.00
PF-1090-J	239	1	$4.00

MODEL	PAGE	PCS/ CS	LIST PRICE
PF-161-D	236	1	$9.70
PF-177-G	239	1	$9.90
PF-218-A	239	1	$15.00
PF-259-X	239	1	$15.70
PF-263-D	239	1	$11.70
PF-3359-A	239	1	$11.20
PF-358-Q	239	1	$4.90
PF-358-RS	239	1	$11.50
PF-398-B8	239	1	$94.60
PF-5075-YP	239	1	$6.80
PF-6928-P	239	1	$43.70
PF-6930	239	1	$20.70
PF-7114-P	239	1	$44.80
PF-7114-PS	239	1	$49.30
PF-7125	239	1	$11.40
PF-7125-C	239	1	$11.40
PF-7125-H	239	1	$10.60
PF-714-RT	239	1	$176.70
PF-725-A	239	1	$55.10
PF-731-G	239	1	$10.70
PF-741-DO	239	1	$8.90
PF-752-T	239	1	$39.20
PF-768-D	239	1	$8.80
PF-776-D	239	1	$11.80
SU-1043-S	239	1	$10.80
SU-1109	239	1	$43.60
SU-1548-605	239	1	$23.90
SU-157-DA	239	1	$49.20
SU-157-G	239	1	$50.60
SU-157-GLA	239	1	$59.40
SU-157-HA	239	1	$64.30
SU-157-JA	239	1	$68.80
SU-157-KRA	178	1	$90.90
SU-157-KSA	178	1	$94.10
SU-1839-P	239	1	$23.70
SU-1855-47RPRC	239	1	$15.30
SU-2090-A	239	1	$133.80
SU-2090-AB	239	1	$133.30
SU-2136-FA	239	1	$80.50
SU-257-JSA	239	1	$143.30
SU-2775-R-02	228	- - -	$46.60
SU-2806	189	1	$55.50
SU-2807	239	1	$37.70
SU-2841-ARC	189	1	$89.20
SU-2841-S	239	1	$117.50
SU-2846	189	1	$42.60
SU-2923-A	183	1	$76.40
SU-2924-A	239	1	$29.20
SU-2924-H-01	239	1	$23.90

MODEL	PAGE	PCS/ CS	LIST PRICE
SU-2924-H-02	239	1	$29.50
SU-2929-01	198	1	$40.00
SU-2987-DA	239	1	$8.30
SU-3026-B	239	1	$45.10
SU-3026-CDL	240	1	$25.90
SU-3130-M	240	1	$65.70
SU-3359-A	240	1	$34.00
SU-357-HSA	178	1	$123.80
SU-357-WSA	178	1	$114.10
SU-358-SA	240	1	$10.70
SU-363-JA	178	1	$40.60
SU-363-JH	240	1	$42.70
SU-363-LA	178	1	$44.80
SU-363-LH	240	1	$46.10
SU-363-MA	178	1	$45.50
SU-363-MH	240	1	$47.20
SU-363-RA	183	1	$31.60
SU-363-RH	240	1	$33.40
SU-365-CA	183	1	$55.50
SU-365-CH	240	1	$58.80
SU-511-A	240	1	$31.60
SU-61-LC	240	1	$8.90
SU-61-LCPP	240	1	$18.80
SU-61-LDP	240	1	$35.20
SU-61-LEP	240	1	$34.70
SU-6965	240	1	$74.70
SU-7071	240	1	$135.70
SU-7101-AF	240	1	$11.60
SU-756-CB	240	1	$5.60
SU-767	240	1	$16.80
SU-83-AZ	240	1	$17.40
SU-85-APF	240	1	$14.30
SU-85-FA	240	1	$16.60
SU-85-K	240	1	$15.40
SU-85-KM	240	1	$15.50
SU-85-U	240	1	$6.10
TC-2	210	6	$56.80
TC-2-C3	210	6	$214.80
TC-2-C3-BN	210	6	$222.60
TC-2-L3	210	6	$211.50
TC-3	210	6	$75.50
TC-3-C3	211	6	$272.10
TC-3-C3-BN	211	6	$284.20
TC-3-L3	211	6	$259.80
TC-3-L3-BN	211	6	$272.40
TCR-2	210	6	$65.90
TCR-3	210	6	$85.60
U-1615-50RC	240	1	$116.50
U-1615-54-04	240	1	$146.80

PRICE INDEX

MODEL	PAGE	PCS/ CS	LIST PRICE
U-2170-AL	240	1	$67.00
U-2170-AR	240	1	$67.00
U-2171-A	240	1	$41.50
X1009-A	240	2	$13.20
X1028-Y	240	25	$3.10
X1038-453	240	25	$4.80
X1038-IN	240	10	$4.30
X1038-KN	240	25	$8.50
X1038-S	240	2	$1.90
X1038-W	240	10	$4.50
X103-HS	240	6	$2.30
X103-HSSS	240	6	$2.30
X103-PLCP	240	6	$3.40
X104	240	25	$3.80
X1043-B	240	6	$4.80
X1043-FN	240	2	$1.90
X1043-T	240	6	$2.80
X105	240	25	$3.60
X105-H	240	6	$3.60
X107-F	240	25	$5.70
X107-FB	240	5	$3.80
X107-FR	240	5	$3.60
X107-H	240	6	$3.60
X1081-N	240	10	$2.40
X113-P	240	6	$1.20
X126-S	240	6	$1.00
X127-AP21/4	240	6	$8.20
X1549	240	2	$22.90
X165	240	10	$15.60
X165-6500	240	2	$6.30
X166-FN	240	6	$1.30
X166-Q	240	6	$2.40
X168-B	240	4	$3.60
X1875	240	2	$7.60
X1875-C	240	2	$7.10
X1876-BB	240	2	$10.70
X193-LBN	241	6	$1.90
X194	241	6	$1.20
X195-C	241	6	$2.60
X207-B	241	6	$3.00
X2133-210	241	2	$57.80
X218-B	241	10	$8.20
X218-C	241	10	$5.10
X218-F	241	2	$8.20
X22	241	6	$2.40
X222-D	241	6	$2.40
X263-BC	241	10	$15.80
X269-29/16	241	10	$33.60
X279-D	241	10	$3.00

MODEL	PAGE	PCS/ CS	LIST PRICE
X279-E	241	10	$4.80
X279-L	241	10	$2.10
X279-V	241	10	$3.60
X28-A	241	6	$2.70
X3	241	6	$4.80
X3008-X	241	2	$7.10
X33-A	241	6	$2.60
X358-U	241	10	$2.00
X358-V	241	10	$5.40
X4	241	6	$5.10
X4015	241	- - -	$7.00
X402-A	241	25	$2.60
X402-B	241	12	$4.80
X4079-3/8	241	1	$13.50
X409-PT	241	12	$5.10
X42	241	6	$4.40
X420-N	241	12	$2.40
X427-WS	241	12	$8.80
X433-AN	241	12	$7.60
X491-S	241	12	$12.40
X4-L	241	6	$2.40
X4-MA	241	6	$2.60
X4-N	241	6	$2.00
X53-AS	241	6	$8.80
X53-AZ	241	6	$8.30
X53-CZ	241	6	$8.40
X54	241	10	$3.70
X68-HX	241	10	$10.10
X69-C	241	10	$3.80
X700-KT	241	2	$15.70
X70-WA	241	6	$7.50
X71	241	2	$16.10
X7133-AZ	241	10	$8.40
X765-TA	241	6	$10.70
X809	241	10	$3.10
X814-BARP	241	10	$12.00
X82-J	241	6	$2.30
X848-B	241	10	$4.00
X85-U	241	2	$2.30
X901-WNN	241	25	$4.30
X904-N	241	6	$2.10
X913-N	241	10	$2.60
X936-A	241	6	$5.30
X940	241	10	$3.70
X940-TRN	241	10	$4.40
X944-N	241	2	$1.70
X945	241	2	$4.20
X947-C	241	10	$4.80
X954-AN	241	10	$2.50

MODEL	PAGE	PCS/ CS	LIST PRICE
X977	241	10	$5.20
X991	241	4	$3.70
X991-A	241	4	$8.00
X991-C	241	4	$4.40
XCS-42021	241	- - -	$7.70
XCS-42022	241	- - -	$3.00
XCS-42023	241	- - -	$5.60
XCS-42025	241	- - -	$5.60
XCS-42029	241	- - -	$22.30
XCS-44002	241	10	$44.60
XCS-45004	241	- - -	$5.90
XCS-45005	241	- - -	$3.00
XCS-45006	241	- - -	$1.20
XCS-45007	241	- - -	$1.20
XCS-47001	242	- - -	$17.80
XCS-49001	242	- - -	$1.20
XCS-49002	242	- - -	$2.40
XCS-49033	242	- - -	$3.40
XCS-53005	242	- - -	$2.40
XG-1867-ALCP	242	2	$20.60
XPF-166-U	242	2	$8.30
XPF-263-B	242	4	$6.00
XPF-263-C	242	2	$7.30
XPF-460	242	2	$8.20
XPF-59	242	10	$15.40
XPF-67-AC	242	10	$6.00
XPF-782-D	242	2	$7.20
XPF-784-C	242	2	$7.20
XSU-1548-BSP	242	2	$40.90
XSU-1858-A	242	2	$25.00
XSU-233-B	242	2	$14.50

RESIDENTIAL

PIONEER

MOD

SINGLE HANDLE BATHROOM FAUCETS

	MODEL#	FINISH	DESCRIPTION	CASE	PRICE
	3MO160	Chrome	• Single-Handle Bathroom Faucet • Metal Lever Handle • Rigid Spout • 4-3/8" Reach, 4" From Deck to Aerator • Ceramic Disc Cartridge • 1-Hole Installation • Brass Pop-Up Drain Assembly • Easy-Install 18" Flex Supply Lines With 3/8" Connections • With 1.2 GPM Flow Rate	6	$251.50
	3MO160-BN	PVD Brushed Nickel		6	$368.20
	3MO160-BG	PVD Brushed Gold		6	$375.70
	3MO160-MB	Matte Black		6	$304.20
	3MO160-WD	Chrome	• Single-Handle Bathroom Faucet • Metal Lever Handle • Rigid Spout • 4-3/8" Reach, 4" From Deck to Aerator • Ceramic Disc Cartridge • 1- or 3-Hole 4" Installation With Deck Cover Plate • Brass Pop-Up Drain Assembly • Easy-Install 18" Flex Supply Lines With 3/8" Connections • With 1.2 GPM Flow Rate	6	$259.20
	3MO160-WD-BN	PVD Brushed Nickel		6	$384.20
	3MO160-WD-BG	PVD Brushed Gold		6	$390.30
	3MO160-WD-MB NEW	Matte Black		6	$403.41
	3MO168	Chrome	• Single-Handle Bathroom Faucet • Metal Lever Handle • Rigid Spout • 4-3/8" Reach, 12" From Deck to Aerator • Ceramic Disc Cartridge • 1-Hole Installation • Easy-Install 18" Flex Supply Lines With 3/8" Connections • With 1.2 GPM Flow Rate	6	$307.70
	3MO168-BN	PVD Brushed Nickel		6	$363.20
	3MO180	Chrome	• Single-Handle Bathroom Faucet • Metal Lever Handle • Rigid Spout • 4-7/8" Reach, 6" From Deck to Aerator • Ceramic Disc Cartridge • 1-Hole Installation • Brass Pop-Up Drain Assembly • Easy-Install 18" Flex Supply Lines With 3/8" Connections • With 1.2 GPM Flow Rate	6	$242.90
	3MO180-BN	PVD Brushed Nickel		6	$325.30
	3MO180-MB	Matte Black		6	$358.30
	3MO180-WD	Chrome	• Single-Handle Bathroom Faucet • Metal Lever Handle • Rigid Spout • 4-7/8" Reach, 6" From Deck to Aerator • Ceramic Disc Cartridge • 1- or 3-Hole 4" Installation With Deck Cover Plate • Brass Pop-Up Drain Assembly • Easy-Install 18" Flex Supply Lines With 3/8" Connections • With 1.2 GPM Flow Rate	6	$243.10
	3MO180-WD-BN	PVD Brushed Nickel		6	$316.60

MOD

SINGLE HANDLE BATHROOM FAUCETS

MODEL#	FINISH	DESCRIPTION	CASE	PRICE
3MO170 NEW	Chrome	• Single-Handle Lavatory Faucet • Metal Lever Handle • Trough Spout • 4-1/2" Reach • Ceramic Disc Cartridge • 1-Hole Installation • Brass Pop-Up Drain Assembly • Easy-Install 18" Flex Supply Lines With 3/8" Connections • With 1.2 GPM Flow Rate	6	$305.50
3MO170-BN NEW	PVD Brushed Nickel		6	$447.30
3MO170-BG NEW	PVD Brushed Gold		6	$452.20
3MO170-MB NEW	Matte Black		6	$369.80

TWO HANDLE BATHROOM FAUCETS

MODEL#	FINISH	DESCRIPTION	CASE	PRICE
3MO200	Chrome	• Two-Handle Bathroom Widespread Faucet • Metal Lever Handles • Rigid Spout • 4-7/8" Reach, 3-3/8" From Deck to Aerator • Ceramic Disc Cartridges • 3-Hole 6" to 16" Installation • Brass Pop-Up Drain Assembly • With 1.2 GPM Flow Rate • Easy-Install Mounting Nut	6	$373.70
3MO200-BN	PVD Brushed Nickel		6	$432.50
3MO200-MB	Matte Black		6	$434.10

MOD

SINGLE HANDLE TUB AND SHOWER TRIM SETS

	MODEL#	FINISH	DESCRIPTION	CASE	PRICE
	T-4MO100	Chrome	• Single-Handle Tub & Shower Trim Set • Metal Lever Handle • Ceramic Disc Cartridge With Temperature Limit Cap • Single-Function 6” Square Showerhead • 8-7/8” L-Shape Shower Arm and Shower Arm Flange • Combo 1/2” IPS/Slip-On Diverter Tub Spout With Escutcheon • With 1.75 GPM Flow Rate • For Use With V-2300B or V-2400B Series Valves – Valves Not Included	6	$269.80
	T-4MO100-BN	PVD Brushed Nickel		6	$333.00
	T-4MO100-MB	Matte Black		6	$343.00
	TD-4MO100-ADA	Chrome	• Single-Handle Tub & Shower Trim Set With Handheld • Metal Lever Handle • Single-Function 6” Square Showerhead – 1.75 GPM Flow Rate • 8-7/8" L-Shape Shower Arm and Shower Arm Flange • Combo 1/2" IPS/Slip-On Diverter Tub Spout With Escutcheon • For Use With V-2500B Valve – Valve Not Included • Three-Function Handheld Showerhead With Non-Positive/Shut Off – 1.75 GPM With 60" Stainless-Steel Flex Hose • 24” Grab/Slide Bar and Brass Drop Ell With Vacuum Breaker	6	$336.60
	TD-4MO100-ADA-BN	PVD Brushed Nickel		6	$506.80
	TD-4MO100-ADA-MB	Matte Black		6	$527.40
	T-4MO110	Chrome	• Single-Handle Tub & Shower Trim Set • Metal Lever Handle • Ceramic Disc Cartridge With Temperature Limit Cap • Single-Function 4” Square Showerhead • Shower Arm and Flange • Extended Combo 1/2” IPS/Slip-On Diverter Tub Spout With Escutcheon • With 1.75 GPM Flow Rate • For Use With V-2300B or V-2400B Series Valves – Valves Not Included	6	$231.80
	T-4MO110-BN	PVD Brushed Nickel		6	$300.50
	T-4MO110-MB	Matte Black		6	$302.00
	T-4MO200	Chrome	• Single-Handle Tub Trim Set • Metal Lever Handle • Ceramic Disc Cartridge With Temperature Limit Cap • Extended Combo 1/2” IPS/Slip-On Tub Spout With Escutcheon • For Use With V-2300B or V-2400B Series Valves – Valves Not Included	6	$169.40
	T-4MO200-BN	PVD Brushed Nickel		6	$201.70

MOD

SINGLE HANDLE TUB AND SHOWER TRIM SETS

	MODEL#	FINISH	DESCRIPTION	CASE	PRICE
	T-4MO300	Chrome	• Single-Handle Shower Trim Set • Metal Lever Handle • Ceramic Disc Cartridge With Temperature Limit Cap • Single-Function 6” Square Showerhead • 8-7/8” L-Shape Shower Arm and Shower Arm Flange • With 1.75 GPM Flow Rate • For Use With V-2300B or V-2400B Series Valves – Valves Not Included	6	$211.30
	T-4MO300-BN	PVD Brushed Nickel		6	$243.30
	T-4MO300-MB NEW	Matte Black		6	$255.47
	TD-4MO300-ADA	Chrome	• Single-Handle Shower Trim Set With Handheld • Metal Lever Handle • Single-Function 6” Square Showerhead – 1.75 GPM Flow Rate • 8-7/8" L-Shape Shower Arm and Shower Arm Flange • For Use With V-2500B Valve – Valve Not Included • Three-Function Handheld Showerhead With Non-Positive/Shut Off – 1.75 GPM With 60" Stainless-Steel Flex Hose • 24” Grab/Slide Bar and Brass Drop Ell With Vacuum Breaker	6	$273.40
	TD-4MO300-ADA-BN	PVD Brushed Nickel		6	$423.30
	TD-4MO300-ADA-MB	Matte Black		6	$436.60
	T-4MO310	Chrome	• Single-Handle Shower Trim Set • Metal Lever Handle • Ceramic Disc Cartridge With Temperature Limit Cap • Single-Function 4” Square Showerhead • Shower Arm and Flange • With 1.75 GPM Flow Rate • For Use With V-2300B or V-2400B Series Valves – Valves Not Included	6	$130.60
	T-4MO310-BN	PVD Brushed Nickel		6	$171.50
	T-4MO310-MB	Matte Black		6	$156.50

MOD

HANDHELD SHOWER SETS

	MODEL#	FINISH	DESCRIPTION	CASE	PRICE
	T-4MO400	Chrome	• Single-Handle Valve Trim Set • Metal Lever Handle • Ceramic Disc Cartridge With Temperature Limit Cap • For Use With V-2300B or V-2400B Series Valves – Valves Not Included	6	$104.90
	T-4MO400-BN	PVD Brushed Nickel		6	$126.70
	6MO101T	Chrome	• Single-Handle Diverter Trim Set • Metal Lever Handle • Diverter Valve Faceplate • Diverter Valve Sleeve • For Use With 4100B Valve – Valve Not Included	12	$83.70
	6MO101T-BN	PVD Brushed Nickel		12	$93.90
	6MO101T-MB	Matte Black		12	$103.00
	6MO400	Chrome	• Handheld Shower Set • Single-Function Handheld Showerhead • 30" Slide Bar With Brass Mounts • 60" Stainless-Steel Flex Hose • Brass Drop Ell With Vacuum Breaker • With 1.75 GPM Flow Rate	6	$356.70
	6MO400-BN	PVD Brushed Nickel		6	$441.60

TWO HANDLE ROMAN TUB TRIM SETS

	MODEL#	FINISH	DESCRIPTION	CASE	PRICE
	T-4MO610	Chrome	• Two-Handle Roman Tub Trim Set • Metal Lever Handle • Rigid Spout • 6-5/8" Reach • 3-Hole 8" to 16" Installation • For Use With P-1131B Valve – Valve Not Included	6	$361.10
	T-4MO610-BN	PVD Brushed Nickel		6	$445.30
	4MO611	Chrome	• Two-Handle Roman Tub Set With Handheld Showerhead • Metal Lever Handle • Rigid Spout • 6-5/8" Reach • Ceramic Disc Cartridges • 4-Hole 8" to 16" Installation • Includes Integral Diverter Valve • Single-Function Handheld Showerhead • With 1.75 GPM Flow Rate	4	$706.50
	4MO611-BN	PVD Brushed Nickel		4	$882.20

MOD

BATHROOM HARDWARE

	MODEL#	FINISH	DESCRIPTION	CASE	PRICE
	7MO030	Chrome	• Towel Bar • 24" Long • Concealed Screw Installation • Mounting Hardware	20	$68.40
	7MO030-BN	PVD Brushed Nickel		20	$88.40
	7MO030-BG	PVD Brushed Gold		20	$138.40
	7MO030-MB	Matte Black		20	$81.70
	7MO031	Chrome	• Towel Bar • 18" Long • Concealed Screw Installation • Mounting Hardware	20	$67.20
	7MO031-BN	PVD Brushed Nickel		20	$85.80
	7MO031-BG	PVD Brushed Gold		20	$125.90
	7MO031-MB	Matte Black		20	$81.30
	7MO032	Chrome	• Toilet Tissue Holder • Concealed Screw Installation • Mounting Hardware	40	$45.50
	7MO032-BN	PVD Brushed Nickel		40	$57.40
	7MO032-BG	PVD Brushed Gold		40	$81.20
	7MO032-MB	Matte Black		40	$54.70
	7MO033	Chrome	• Robe Hook • Concealed Screw Installation • Mounting Hardware	40	$31.00
	7MO033-BN	PVD Brushed Nickel		40	$37.00
	7MO033-BG	PVD Brushed Gold		40	$46.80
	7MO033-MB	Matte Black		40	$37.10
	7MO034	Chrome	• Towel Ring • Concealed Screw Installation • Mounting Hardware	40	$41.50
	7MO034-BN	PVD Brushed Nickel		40	$53.90
	7MO034-BG	PVD Brushed Gold		40	$77.00
	7MO034-MB	Matte Black		40	$49.90

MOTEGI

SINGLE HANDLE PULL-DOWN KITCHEN FAUCETS

	MODEL#	FINISH	DESCRIPTION	CASE	PRICE
	2MT250	Chrome	• Single-Handle Pull-Down Kitchen Faucet • Metal Lever Handle • Pull-Down Head with 2 Spray Patterns, Swivel 360 Degree With Quick-Connect Spray Head Hose • 8-9/16" Reach, 10-1/16" From Deck to Aerator • Ceramic Disc Cartridge • 1- or 3-Hole 8" Installation With Deck Cover Plate • Easy-Install 30" Flex Supply Lines With 3/8" Connections • With 1.5 GPM Flow Rate	6	$442.20
	2MT250-BN	PVD Brushed Nickel		6	$495.20
	2MT250-SS	PVD Stainless Steel		6	$500.00
	2MT260	Chrome	• Single-Handle Pull-Down Kitchen Faucet • Metal Lever Handle • Pull-Down Head with 2 Spray Patterns, Swivel 360 Degree With Quick-Connect Spray Head Hose • 8-9/16" Reach, 9-15/16" From Deck to Aerator • Ceramic Disc Cartridge • 1- or 3-Hole 8" Installation With Deck Cover Plate • Easy-Install 30" Flex Supply Lines With 3/8" Connections • With 1.5 GPM Flow Rate	6	$474.30
	2MT260-BN	PVD Brushed Nickel		6	$497.00
	2MT260-BG	PVD Brushed Gold		6	$485.60
	2MT260-MB	Matte Black		6	$536.70
	2MT261	Chrome	• Same as Above With 1-Hole Installation Option Only	6	$445.80
	2MT261-BN NEW	PVD Brushed Nickel		6	$483.79
	2MT270	Chrome	• Single-Handle Pre-Rinse Spring Pull-Down Kitchen Faucet • Metal Lever Handle • Pull-Down Head with 2 Spray Patterns, Swivel 360 Degree With Quick-Connect Spray Head Hose • 9" Reach, 7" From Deck to Aerator, 22-3/4" Overall Height • Ceramic Disc Cartridge • 1-Hole Installation • Spring-Style Spout Swivels 360 Degree • Easy-Install 30" Flex Supply Lines With 3/8" Connections • With 1.5 GPM Flow Rate	4	$491.00
	2MT270-BN	PVD Brushed Nickel		4	$566.00
	2MT270-BG	PVD Brushed Gold		4	$519.60
	2MT270-MB	Matte Black		4	$570.60
	2MT275	Chrome	• Single-Handle Pre-Rinse Spring Pull-Down Kitchen Faucet • Metal Lever Handle • Pull-Down Head with 2 Spray Patterns, Swivel 360 Degree With Quick-Connect Spray Head Hose • 9" Reach, 7" From Deck to Aerator, 19-3/4" Overall Height • Ceramic Disc Cartridge • 1-Hole Installation • Spring-Style Spout Swivels 360 Degree • Easy-Install 30" Flex Supply Lines With 3/8" Connections • With 1.5 GPM Flow Rate	4	$476.30
	2MT275-BN	PVD Brushed Nickel		4	$560.40
	2MT280 NEW	Chrome	• Single-Handle Pre-Rinse Spring Pull-Down Kitchen Faucet • Metal Lever Handle • Spring Action Pull-Down Head with 2 Spray Patterns, Swivel 360 Degree • 8-11/16" Reach, 7-11/16" From Deck to Aerator, 21-3/8" Overall Height • Ceramic Disc Cartridge • 1-Hole Installation • Spring-Style Spout Swivels 360 Degree • Easy-Install 30" Flex Supply Lines With 3/8" Connections • With 1.5 GPM Flow Rate	6	$268.80
	2MT280-BN NEW	PVD Brushed Nickel		6	$339.10
	2MT280-BG NEW	PVD Brushed Gold		6	$404.00
	2MT280-MB NEW	Matte Black		6	$353.00

MOTEGI

SINGLE HANDLE KITCHEN FAUCETS

	MODEL#	FINISH	DESCRIPTION	CASE	PRICE
	2MT161H	Chrome	• Single-Handle Kitchen Faucet • Metal Lever Handle • Bent-Nose Spout Swivel 360º • 8-1/2" Reach, 6-7/16" From Deck to Aerator • Ceramic Disc Cartridge With Temperature Limit Cap • 2-Hole Installation • Brass Side-Spray Assembly • Easy-Install 30" Flex Supply Lines With 3/8" Connections • With 1.5 GPM Flow Rate	6	$384.80
	2MT161H-BN	PVD Brushed Nickel		6	$411.80
	2MT171H	Chrome	• Single-Handle Kitchen Faucet • Metal Lever Handle • Gooseneck 360 Degree Swivel Spout • 7-5/8" Reach, 8-1/2" From Deck to Aerator • Ceramic Disc Cartridge With Temperature Limit Cap • 2-Hole Installation • Brass Side-Spray Assembly With Quick-Connect • Easy-Install 30" Flex Supply Lines With 3/8" Connections • With 1.5 GPM Flow Rate	6	$403.90
	2MT171H-BN	PVD Brushed Nickel		6	$435.50
	2MT182H	Chrome	• Single-Handle Kitchen Faucet • Metal Lever Handle • 90-Degree 360 Degree Swivel Spout • 8" Reach, 9" From Deck to Aerator • Ceramic Disc Cartridge With Temperature Limit Cap • 2-Hole Installation • Side-Spray Assembly With Quick-Connect • Easy-Install 30" Flex Supply Lines With 3/8" Connections • With 1.5 GPM Flow Rate	6	$302.20
	2MT182H-BN	PVD Brushed Nickel		6	$334.70

POT FILLERS

	MODEL#	FINISH	DESCRIPTION	CASE	PRICE
	2MT600	Chrome	• Wall Mount Pot Filler • Metal Lever Handles • Space-Saving Swivel Spout Folds in When Not in Use • 23-9/16" Spout Reach • Ceramic Disc Cartridges • 1-Hole Wall-Mount Installation • Designed for Cold Water • 1/2" IPS Connection With Flange • With 2.0 GPM Flow Rate	6	$348.70
	2MT600-BN	PVD Brushed Nickel		6	$383.90
	2MT600-MB	Matte Black		6	$403.10
	2MT600-SS	PVD Stainless Steel		6	$376.50

MOTEGI

SINGLE HANDLE BATHROOM FAUCETS

	MODEL#	FINISH	DESCRIPTION	CASE	PRICE
	3MT160	Chrome	• Single-Handle Bathroom Faucet • Metal Lever Handle • Bent-Nose Spout • 5-5/8" Reach, 1-3/4" From Deck to Aerator • Ceramic Disc Cartridge With Temperature Limit Cap • 1-Hole Installation • Brass Pop-Up Drain Assembly • Easy-Install 18" Flex Supply Lines With 3/8" Connections • With 1.2 GPM Flow Rate	6	$236.00
	3MT160-BN	PVD Brushed Nickel		6	$243.30
	3MT160-BG	PVD Brushed Gold		6	$242.10
	3MT160-MB	Matte Black		6	$248.80
	3MT160-WD-BN NEW	PVD Brushed Nickel	• Same as Above With 1- or 3-Hole 4" Installation With Deck Cover Plate	6	$255.30
	3MT160-WD-BG	PVD Brushed Gold		6	$251.20
	3MT168	Chrome	• Single-Handle Bathroom Faucet • Metal Lever Handle • Bent-Nose Spout • 5-5/8" Reach, 9-3/4" From Deck to Aerator • Ceramic Disc Cartridge With Temperature Limit Cap • 1-Hole Installation • Easy-Install 18" Flex Supply Lines With 3/8" Connections • With 1.2 GPM Flow Rate	6	$281.80
	3MT168-BN	PVD Brushed Nickel		6	$292.60
	3MT170	Chrome	• Single-Handle Bathroom Faucet • Metal Lever Handle • Straight Spout • 3-3/4" Reach, 2-7/8" From Deck to Aerator • Ceramic Disc Cartridge With Temperature Limit Cap • 1-Hole Installation • Brass Pop-Up Drain Assembly • Easy-Install 18" Flex Supply Lines With 3/8" Connections • With 1.2 GPM Flow Rate	6	$236.50
	3MT170-BN	PVD Brushed Nickel		6	$240.90
	3MT170-MB	Matte Black		6	$248.00
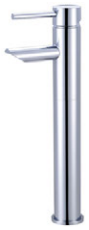	3MT178	Chrome	• Single-Handle Bathroom Faucet • Metal Lever Handle • Straight Spout • 3-3/4" Reach, 10-7/8" From Deck to Aerator • Ceramic Disc Cartridge With Temperature Limit Cap • 1-Hole Installation • Easy-Install 18" Flex Supply Lines With 3/8" Connections • With 1.2 GPM Flow Rate	6	$273.40
	3MT180	Chrome	• Single-Handle Bathroom Faucet • Metal Lever Handle • Gooseneck Spout Swivel 90 Degree • 5-1/2" Reach, 8-1/2" From Deck to Aerator • Ceramic Disc Cartridge With Temperature Limit Cap • 1-Hole Installation • Brass Pop-Up Drain Assembly • Easy-Install 18" Flex Supply Lines With 3/8" Connections • With 1.2 GPM Flow Rate	6	$345.20
	3MT180-BN	PVD Brushed Nickel		6	$343.80
	3MT180-BG NEW	PVD Brushed Gold		6	$364.47
	3MT180-MB	Matte Black		6	$350.60
	3MT800	Chrome	• Single-Handle Bathroom Wall Mount Vessel Filler • Metal Lever Handle • Bent-Nose Spout • 10" Reach • Ceramic Disc Cartridge With Temperature Limit Cap • 2-Hole 4" Installation • Includes Valve With Mounting Plate • With 1.2 GPM Flow Rate • 1" Extension Kit Available X-49001 X-4900125-BN	6	$259.90
	3MT800-BN	PVD Brushed Nickel		6	$267.10
	3MT800-MB	Matte Black		6	$272.70

MOTEGI

TWO HANDLE BATHROOM FAUCETS

	MODEL#	FINISH	DESCRIPTION	CASE	PRICE
	3MT500	Chrome	• Two-Handle Bathroom Widespread Faucet • Metal Lever Handles • Bent-Nose Spout • 6-1/2" Reach, 1-3/4" From Deck to Aerator • Ceramic Disc Cartridges • 3-Hole 6" to 16" Installation • Brass Pop-Up Drain Assembly • With 1.2 GPM Flow Rate • Easy-Install Mounting Nut	6	$368.40
	3MT500-BN	PVD Brushed Nickel		6	$381.10
	3MT420	Chrome	• Two-Handle Bathroom Widespread Faucet • Metal Lever Handles • 90-Degree Spout • 5-1/2" Reach, 2-1/2" From Deck to Aerator • Ceramic Disc Cartridges • 3-Hole 6" to 16" Installation • Brass Pop-Up Drain Assembly • With 1.5 GPM Flow Rate • Easy-Install Mounting Nut	6	$341.20
	3MT420-BN	PVD Brushed Nickel		6	$395.00
	3MT420-MB	Matte Black		6	$425.20
	3MT400	Chrome	• Two-Handle Bathroom Widespread Faucet • Metal Lever Handles • Gooseneck Spout Swivel 90 Degree • 5-1/2" Reach, 7" From Deck to Aerator • Ceramic Disc Cartridges • 3-Hole 6" to 16" Installation • Brass Pop-Up Drain Assembly • With 1.2 GPM Flow Rate • Easy-Install Mounting Nut	6	$422.40
	3MT400-BN	PVD Brushed Nickel		6	$445.70

MOTEGI

TUB & SHOWER TRIM SETS

	MODEL#	FINISH	DESCRIPTION	CASE	PRICE
	T-4MT110	Chrome	• Single-Handle Tub & Shower Trim Set • Metal Lever Handle • Ceramic Disc Cartridge With Temperature Limit Cap • Five Function 3" Diameter Showerhead • Shower Arm and Flange • 1/2" IPS Diverter Tub Spout, 7-1/4" Spout Reach • With 1.75 GPM Flow Rate • For Use With V-2300B or V-2400B Series Valves – Valves Not Included	6	$304.10
	T-4MT110-BN	PVD Brushed Nickel		6	$351.40
	T-4MT110-MB	Matte Black		6	$321.60
	T-4MT110-LS	Chrome	• Same as Above Less Showerhead	6	$233.10
	T-4MT110-6R-MB	Matte Black	• Single Function 6" Diameter Rain Showerhead	6	$351.40
	T-4MT110-7S NEW	Chrome	• Single-Handle Tub & Shower Trim Set • Metal Lever Handle • Ceramic Disc Cartridge With Temperature Limit Cap • Five Function 3" Diameter Showerhead • Shower Arm and Flange • Combo 1/2" IPS/Slip-On Diverter Tub Spout With Escutcheon, 7-1/4" Spout Reach • With 1.75 GPM Flow Rate • For Use With V-2300B or V-2400B Series Valves – Valves Not Included	12	$271.00
	T-4MT110-7S-BN NEW	PVD Brushed Nickel		12	$319.00
	T-4MT110-7S-MB NEW	Matte Black		12	$356.00
	T-4MT200	Chrome	• Single-Handle Tub Trim Set • Metal Lever Handle • Ceramic Disc Cartridge With Temperature Limit Cap • 1/2" IPS Tub Spout With Escutcheon, 6-1/8" Spout Reach • For Use With V-2300B or V-2400B Series Valves – Valves Not Included	6	$193.60
	T-4MT200-BN	PVD Brushed Nickel		6	$222.40
	T-4MT201	Chrome	• Combo 1/2" IPS/Slip-On Tub Spout With Escutcheon, 7" Spout Reach • For Use With V-2300B or V-2400B Series Valves – Valves Not Included	6	$175.30
	T-4MT201-BN	PVD Brushed Nickel		6	$222.50
	T-4MT300	Chrome	• Single-Handle Shower Trim Set • Metal Lever Handle • Ceramic Disc Cartridge With Temperature Limit Cap • Five Function 3" Diameter Showerhead • Shower Arm and Flange • With 1.75 GPM Flow Rate • For Use With V-2300B or V-2400B Series Valves – Valves Not Included	6	$193.50
	T-4MT300-BN	PVD Brushed Nickel		6	$241.90
	T-4MT300-MB	Matte Black		6	$235.60
	T-4MT300-6R-MB	Matte Black	• Single Function 6" Diameter Rain Showerhead	6	$230.40

MOTEGI

TUB & SHOWER TRIM SETS

	MODEL#	FINISH	DESCRIPTION	CASE	PRICE
	T-4MT120	Chrome	• Single Handle Tub and Shower Trim Set • Metal Lever Handle • Ceramic Disc Cartridge With Temperature Limit Cap • Single Function 3-3/8" Diameter Showerhead • Shower Arm and Flange • 1/2" IPS Diverter Tub Spout, 7-1/4" Spout Reach • With 1.75 GPM Flow Rate • For Use With V-2300B or V-2400B Series Valves – Valves Not Included	6	$277.50
	T-4MT120-BN	PVD Brushed Nickel		6	$337.80
	T-4MT320	Chrome	• Single-Handle Shower Trim Set • Metal Lever Handle • Ceramic Disc Cartridge With Temperature Limit Cap • Single Function 3-3/8" Diameter Showerhead • Shower Arm and Flange • With 1.75 GPM Flow Rate • For Use With V-2300B or V-2400B Series Valves – Valves Not Included	6	$158.10
	T-4MT320-BN	PVD Brushed Nickel		6	$201.30
	T-4MT115	Chrome	• Single-Handle Tub & Shower Trim Set • Metal Lever Handle • Ceramic Disc Cartridge With Temperature Limit Cap • Single-Function 8" Diameter Rain Showerhead • 15" L-Shape Shower Arm and Shower Arm Flange • 1/2" IPS Diverter Tub Spout, 7-1/4" Spout Reach • With 1.75 GPM Flow Rate • For Use With V-2300B or V-2400B Series Valves – Valves Not Included	6	$431.80
	T-4MT115-BN	PVD Brushed Nickel		6	$478.30
	T-4MT115-7S NEW	Chrome	• Single-Handle Tub & Shower Trim Set • Metal Lever Handle • Ceramic Disc Cartridge With Temperature Limit Cap • Single-Function 8" Diameter Rain Showerhead • 15" L-Shape Shower Arm and Shower Arm Flange • Combo 1/2" IPS/Slip-On Diverter Tub Spout With Escutcheon, 7-1/4" Spout Reach • With 1.75 GPM Flow Rate • For Use With V-2300B or V-2400B Series Valves – Valve Not Included	6	$384.00
	T-4MT115-7S-BN NEW	PVD Brushed Nickel		6	$448.00
	T-4MT115-7S-MB NEW	Matte Black		6	$463.00

MOTEGI

TUB & SHOWER TRIM SETS

	MODEL#	FINISH	DESCRIPTION	CASE	PRICE
	T-4MT315	Chrome	• Single-Handle Shower Trim Set • Metal Lever Handle • Ceramic Disc Cartridge With Temperature Limit Cap • Single-Function 8" Diameter Rain Showerhead • 15" L-Shape Shower Arm and Shower Arm Flange • With 1.75 GPM Flow Rate • For Use With V-2300B or V-2400B Series Valves – Valves Not Included	6	$239.30
	T-4MT315-BN	PVD Brushed Nickel		6	$298.50
	T-4MT111	Chrome	• Single-Handle Tub & Shower Trim Set • Metal Lever Handle • Ceramic Disc Cartridge With Temperature Limit Cap • Five Function 3" Diameter Showerhead • Shower Arm and Flange • Combo 1/2" IPS/Slip-On Diverter Tub Spout With Escutcheon, 7" Spout Reach • With 1.75 GPM Flow Rate • For Use With V-2300B or V-2400B Series Valves – Valves Not Included	6	$236.70
	T-4MT111-BN	PVD Brushed Nickel		6	$283.80
	T-4MT111-MB	Matte Black		6	$286.50
	T-4MT131	Chrome	• Single-Handle Tub & Shower Trim Set • Metal Lever Handle • Ceramic Disc Cartridge With Temperature Limit Cap • Single Function 6" Diameter Rain Showerhead • Shower Arm and Flange • Combo 1/2" IPS/Slip-On Diverter Tub Spout With Escutcheon, 7" Spout Reach • With 1.75 GPM Flow Rate • For Use With V-2300B or V-2400B Series Valves – Valves Not Included	6	$243.40
	T-4MT131-BN	PVD Brushed Nickel		6	$274.90
	T-4MT131-BG	PVD Brushed Gold		6	$286.20
	T-4MT131-7S NEW	Chrome	• Single-Handle Tub & Shower Trim Set • Metal Lever Handle • Ceramic Disc Cartridge With Temperature Limit Cap • Single Function 6" Diameter Rain Showerhead • Shower Arm and Flange • Combo 1/2" IPS/Slip-On Diverter Tub Spout With Escutcheon, 7-1/4" Spout Reach • With 1.75 GPM Flow Rate • For Use With V-2300B or V-2400B Series Valves – Valves Not Included	12	$235.00
	T-4MT131-7S-BN NEW	PVD Brushed Nickel		12	$282.00
	T-4MT131-7S-MB NEW	Matte Black		12	$292.00

MOTEGI

TUB & SHOWER TRIM SETS

	MODEL#	FINISH	DESCRIPTION	CASE	PRICE
	TD-4MT131-ADA	Chrome	• Single-Handle Tub & Shower Trim Set • Metal Lever Handle • Single-Function 6" Diameter Rain Showerhead – 1.75 GPM Flow Rate • Shower Arm and Flange • Combo 1/2" IPS/Slip-On Diverter Tub Spout With Escutcheon, 7" Spout Reach • For Use With V-2500B Valve – Valve Not Included • Three-Function Handheld Showerhead With Non-Positive/Shut Off – 1.75 GPM With 60" Stainless-Steel Flex Hose • 24" Grab/Slide Bar and Brass Drop Ell With Vacuum Breaker	6	$336.60
	TD-4MT131-ADA-BN	PVD Brushed Nickel		6	$479.40
	TD-4MT131-ADA-MB	Matte Black		6	$503.90
	T-4MT330	Chrome	• Single-Handle Shower Trim Set • Metal Lever Handle • Ceramic Disc Cartridge With Temperature Limit Cap • Single Function 6" Diameter Rain Showerhead • Shower Arm and Flange • With 1.75 GPM Flow Rate • For Use With V-2300B or V-2400B Series Valves – Valves Not Included	6	$154.00
	T-4MT330-BN	PVD Brushed Nickel		6	$231.50
	T-4MT330-BG NEW	PVD Brushed Gold		6	$250.26
	TD-4MT330-ADA	Chrome	• Single-Handle Shower Trim Set • Metal Lever Handle • Single-Function 6" Diameter Rain Showerhead – 1.75 GPM Flow Rate • Shower Arm and Flange • For Use With V-2500B Valve – Valve Not Included • Three-Function Handheld Showerhead With Non-Positive/Shut Off – 1.75 GPM With 60" Stainless-Steel Flex Hose • 24" Grab/Slide Bar and Brass Drop Ell With Vacuum Breaker	6	$278.80
	TD-4MT330-ADA-BN	PVD Brushed Nickel		6	$401.50
	TD-4MT330-ADA-MB	Matte Black		6	$413.10
	T-4MT400	Chrome	• Single-Handle Valve Trim Set • Metal Lever Handle • Ceramic Disc Cartridge With Temperature Limit Cap • For Use With V-2300B or V-2400B Series Valves – Valves Not Included	6	$124.90
	T-4MT400-BN	PVD Brushed Nickel		6	$147.90
	6MT101T	Chrome	• Single-Handle Diverter Trim Set • Metal Lever Handle • Diverter Valve Faceplate • Diverter Valve Sleeve • For Use With 4100B Valve – Valve Not Included	12	$79.60
	6MT101T-BN	PVD Brushed Nickel		12	$91.40

MOTEGI

HANDHELD SHOWER SETS

	MODEL#	FINISH	DESCRIPTION	CASE	PRICE
	6MT400	Chrome	• Handheld Shower Set • Single-Function Handheld Showerhead • 25" Slide Bar With Brass Mounts • 60" Stainless-Steel Flex Hose • Brass Drop Ell With Vacuum Breaker • With 1.75 GPM Flow Rate	6	$428.80
	6MT400-BN	PVD Brushed Nickel		6	$448.70
	6MT410	Chrome	• Handheld Shower Set • Single-Function Handheld Showerhead • 60" Stainless-Steel Flex Hose • Wall Mount Bracket with Vacuum Breaker • With 1.75 GPM Flow Rate	6	$207.90
	6MT410-BN	PVD Brushed Nickel		6	$219.70
	6MT410-BG NEW	PVD Brushed Gold		6	$226.00
	6MT410-MB NEW	Matte Black		6	$220.00

TWO HANDLE ROMAN TUB SETS

	MODEL#	FINISH	DESCRIPTION	CASE	PRICE
	4MT600	Chrome	• Two-Handle Wall Mount Roman Tub Set • Metal Lever Handles • Bent-Nose Spout • 10" Reach • Ceramic Disc Cartridges • 3-Hole 8" Installation • Includes Valve With Mounting Plate	6	$322.80
	4MT600-BN	PVD Brushed Nickel		6	$372.20
	4MT600-MB	Matte Black		6	$395.40
	4MT610	Chrome	• Two-Handle Roman Tub Set • Metal Lever Handles • Rigid Bent-Nose Spout • 9-3/8" Reach • Ceramic Disc Cartridges • 3-Hole 8" to 16" Installation • Includes Spout and Valve Escutcheons	4	$433.50
	4MT610-BN	PVD Brushed Nickel		4	$452.90

MOTEGI

SINGLE HANDLE ROMAN TUB SETS

	MODEL#	FINISH	DESCRIPTION	CASE	PRICE
	4MT840	Chrome	• Single-Handle Wall Mount Roman Tub Set • Metal Lever Handles • Bent-Nose Spout • 10" Reach • Ceramic Disc Cartridge With Temperature Limit Cap • 2-Hole 4" Installation • Includes Valve With Mounting Plate • 1" Extension Kit Available X-49001 X4900125-BN	6	$342.40
	4MT840-BN	PVD Brushed Nickel		6	$359.90
	4MT840-BG NEW	PVD Brushed Gold		6	$378.23
	4MT840-MB	Matte Black		6	$375.30

SINGLE HANDLE FLOOR MOUNT ROMAN TUB SETS

	MODEL#	FINISH	DESCRIPTION	CASE	PRICE
	4MT900T	Chrome	• Single-Handle Floor-Mount Freestanding Tub Trim Set • Rigid/Swivel Gooseneck Spout • 7-13/16" Reach, 36-1/8" From Floor to Aerator • Two Way Pressure Balanced Ceramic Disc Diverter Cartridge • Single-Function Handheld Showerhead • Pivot-Hand Shower Holder • 60" Stainless-Steel Flex Hose • For Use With 4400B/4410B Series Valves – Valves Not Included • Showerhead Limited to 1.75 GPM	1	$1,416.70
	4MT900T-BN	PVD Brushed Nickel		1	$1,750.00
	4MT900T-MB	Matte Black		1	$1,802.00
	4MT910T	Chrome	• Single-Handle Floor-Mount Freestanding Tub Trim Set • Rigid/Swivel 90-Degree Spout • 10" Reach, 38-5/6" From Floor to Aerator • Two Way Pressure Balanced Ceramic Disc Diverter Cartridge • Single-Function Handheld Showerhead • Pivot-Hand Shower Holder • 60" Stainless-Steel Flex Hose • For Use With 4400B/4410B Series Valves – Valves Not Included • Showerhead Limited to 1.75 GPM	1	$1,464.50
	4MT910T-BN	PVD Brushed Nickel		1	$1,830.70
	4MT910T-MB	Matte Black		1	$1,931.90

MOTEGI

BATHROOM HARDWARE

	MODEL#	FINISH	DESCRIPTION	CASE	PRICE
	7MT030	Chrome	• Towel Bar • 24" Long • Brass Mount • Concealed Screw Installation • Mounting Hardware	20	$114.00
	7MT030-BN	PVD Brushed Nickel		20	$120.70
	7MT031	Chrome	• Towel Bar • 18" Long • Brass Mount • Concealed Screw Installation • Mounting Hardware	20	$104.50
	7MT031-BN	PVD Brushed Nickel		20	$111.20
	7MT032	Chrome	• Toilet Tissue Holder • Brass Mount • Concealed Screw Installation • Mounting Hardware	40	$59.90
	7MT032-BN	PVD Brushed Nickel		40	$63.70
	7MT033	Chrome	• Robe Hook • Brass Mount • Concealed Screw Installation • Mounting Hardware	40	$59.90
	7MT033-BN	PVD Brushed Nickel		40	$63.70
	7MT034	Chrome	• Towel Ring • Brass Mount • Concealed Screw Installation • Mounting Hardware	40	$59.90
	7MT034-BN	PVD Brushed Nickel		40	$63.70

PREMIUM

TWO HANDLE WALL MOUNT FAUCETS

	MODEL#	FINISH	DESCRIPTION	CASE	PRICE
	2PM440	Chrome	• Two-Handle Wall Mount Faucet • Metal Cross Handles • Hi-Tubular Spout • 9-1/4" Reach • Ceramic Disc Cartridges • 2-Hole 3-1/2" to 8-1/2" Installation • 1/2" Eccentric Connections • With 1.5 GPM Flow Rate	12	$180.40
	2PM540	Chrome	• Two-Handle Wall Mount Faucet • Metal Cross Handles • Tubular Spout • 10-1/2" Reach • Ceramic Disc Cartridges • 2-Hole 3-1/2" to 8-1/2" Installation • 1/2" Eccentric Connections • With 1.5 GPM Flow Rate	12	$180.40

LEGACY

SINGLE-HANDLE KITCHEN FAUCETS

	MODEL#	FINISH	DESCRIPTION	CASE	PRICE
	2LG160	Chrome	• Single-Handle Kitchen Faucet • Metal Lever Handle • 360 Degree Swivel Spout • 9-11/16" Reach, 5-7/8" From Deck to Aerator • Ceramic Disc Cartridge With Temperature Limit Cap • 3-Hole 8" Installation • With 1.5 GPM Flow Rate	12	$162.10
	2LG160H	Chrome	• Easy-Install 30" Flex Supply Lines With 3/8" Connections	12	$162.70
	2LG160H-BN	PVD Brushed Nickel		12	$176.40
	2LG161	Chrome	• Single-Handle Kitchen Faucet • Metal Lever Handle • 360 Degree Swivel Spout • 9-11/16" Reach, 5-7/8" From Deck to Aerator • Ceramic Disc Cartridge With Temperature Limit Cap • 4-Hole 8" Installation • Side-Spray Assembly With Quick-Connect • With 1.5 GPM Flow Rate	12	$192.00
	2LG161-BN	PVD Brushed Nickel		12	$201.60
	2LG161H	Chrome	• Easy-Install 30" Flex Supply Lines With 3/8" Connections	12	$197.10
	2LG161H-BN	PVD Brushed Nickel		12	$207.80
	2LG162	Chrome	• Single-Handle Kitchen Faucet • Metal Lever Handle • 360 Degree Swivel Spout • 9-11/16" Reach, 5-7/8" From Deck to Aerator • Ceramic Disc Cartridge With Temperature Limit Cap • 3-Hole 8" Installation • Side-Spray Assembly on Deck With Quick-Connect • With 1.5 GPM Flow Rate	12	$191.00
	2LG260	Chrome	• Single-Handle Kitchen Faucet • Metal Lever Handle • 360 Degree Swivel Spout • 9-11/16" Reach, 5-7/8" From Deck to Aerator • Ceramic Disc Cartridge With Temperature Limit Cap • 1-Hole Installation • With 1.5 GPM Flow Rate	12	$158.20
	2LG260-BN	PVD Brushed Nickel		12	$172.00
	2LG261	Chrome	• Single-Handle Kitchen Faucet • Metal Lever Handle • 360 Degree Swivel Spout • 9-11/16" Reach, 5-7/8" From Deck to Aerator • Ceramic Disc Cartridge With Temperature Limit Cap • 2-Hole Installation • Side-Spray Assembly With Quick-Connect • With 1.5 GPM Flow Rate	12	$194.30
	2LG110 NEW	Chrome	• Two-Handle Kitchen Faucet • Mini Blade Handles • Spout Swivel 360 Degree • 9-11/16" Reach, 5-1/4" from Deck to Aerator • Ceramic Disc Cartridges • 3-Hole 8" Installation • With 1.5 GPM Flow Rate	12	$138.02

LEGACY

SINGLE HANDLE PULL-DOWN KITCHEN FAUCETS

	MODEL#	FINISH	DESCRIPTION	CASE	PRICE
	2LG250	Chrome	• Single-Handle Pull-Down Kitchen Faucet • Metal Lever Handle • Pull-Down Head with 2 Spray Patterns, Swivel 360 Degree With Quick-Connect Spray Head Hose • 8-1/2" Reach, 8" From Deck to Aerator • Ceramic Disc Cartridge • 1- or 3-Hole 8" Installation With Deck Cover Plate • Easy-Install 30" Flex Supply Lines With 3/8" Connections • With 1.5 GPM Flow Rate	6	$354.40
	2LG250-BN	PVD Brushed Nickel		6	$388.80
	2LG220	Chrome	• Single-Handle Pull-Out Kitchen Faucet • Metal Lever Handle • Pull-Out Head With 2 Spray Patterns Swivel 180 Degree With Quick-Connect Spray Head Hose • 9" Reach, 7" From Deck to Aerator • Ceramic Disc Cartridge With Temperature Limit Cap • 1- or 3-Hole 8" Installation With Deck Cover Plate • Easy-Install 30" Flex Supply Lines With 3/8" Connections • With 1.5 GPM Flow Rate	6	$249.20
	2LG220-BN	PVD Brushed Nickel		6	$265.70

TWO HANDLE KITCHEN FAUCETS

	MODEL#	FINISH	DESCRIPTION	CASE	PRICE
	2LG240	Chrome	• Two-Handle Kitchen Faucet • ADA Wrist-Blade Handles • Hi-Arc-Spout Swivel 360° • 7-3/16" Reach, 11-3/16" From Deck to Aerator • Ceramic Disc Cartridges • 3-Hole 8" Installation • With 1.5 GPM Flow Rate	6	$152.30

LEGACY

SINGLE HANDLE BATHROOM FAUCETS

	MODEL#	FINISH	DESCRIPTION	CASE	PRICE
	3LG160	Chrome	• Single-Handle Bathroom Faucet • Metal Lever Handle • 4-5/8" Reach, 1-7/8" From Deck to Aerator • Ceramic Disc Cartridge With Temperature Limit Cap • 3-Hole 4" Installation • Brass Pop-Up Drain Assembly • With 1.2 GPM Flow Rate	12	$147.10
	3LG160-BN	PVD Brushed Nickel		12	$155.60
	3LG160H	Chrome	• Easy-Install 18" Flex Supply Lines With 3/8" Connections	12	$145.80
	3LG160H-BN	PVD Brushed Nickel		12	$163.80
	3LG161	Chrome	• Single-Handle Bathroom Faucet • Metal Lever Handle • 4-5/8" Reach, 1-7/8" From Deck to Aerator • Ceramic Disc Cartridge With Temperature Limit Cap • 3-Hole 4" Installation • With 1.2 GPM Flow Rate	12	$115.70
	3LG161G	Chrome	• Single-Handle Bathroom Faucet • Metal Lever Handle • 4-5/8" Reach, 1-7/8" From Deck to Aerator • Ceramic Disc Cartridge With Temperature Limit Cap • 3-Hole 4" Installation • Brass Grid Strainer Drain Assembly • With 1.2 GPM Flow Rate	12	$136.60
	3LG260H	Chrome	• Single-Handle Bathroom Faucet • Metal Lever Handle • 4-3/8" Reach, 2-3/8" From Deck to Aerator • Ceramic Disc Cartridge With Temperature Limit Cap • 1-Hole Installation • Brass Pop-Up Drain Assembly • Easy-Install 18" Flex Supply Lines With 3/8" Connections • With 1.2 GPM Flow Rate	12	$155.10
	3LG260H-BN	PVD Brushed Nickel		12	$163.60

LEGACY

SINGLE-HANDLE BATHROOM FAUCETS

	MODEL#	FINISH	DESCRIPTION	CASE	PRICE
	3LG260H-WD	Chrome	• Single-Handle Bathroom Faucet • Metal Lever Handle • 4-3/8" Reach, 2-3/8" From Deck to Aerator • Ceramic Disc Cartridge With Temperature Limit Cap • 1- or 3-Hole 4" Installation • Brass Pop-Up Drain Assembly • Easy-Install 18" Flex Supply Lines With 3/8" Connections • With 1.2 GPM Flow Rate • Deck Cover Plate Included	12	$159.10
	3LG260H-WD-BN	PVD Brushed Nickel		12	$174.20
	3LG264H	Chrome	• Single-Handle Bathroom Faucet • Metal Lever Handle • 4-3/8" Reach, 2-3/8" From Deck to Aerator • Ceramic Disc Cartridge With Temperature Limit Cap • 1-Hole Installation • Easy-Install 18" Flex Supply Lines With 3/8" Connections • With 1.2 GPM Flow Rate	12	$119.60
	3LG264H-BN	PVD Brushed Nickel		12	$133.50
	3LG264H-WD	Chrome	• Single-Handle Bathroom Faucet • Metal Lever Handle • 4-3/8" Reach, 2-3/8" From Deck to Aerator • Ceramic Disc Cartridge With Temperature Limit Cap • 1- or 3-Hole 4" Installation • Easy-Install 18" Flex Supply Lines With 3/8" Connections • With 1.2 GPM Flow Rate • Deck Cover Plate Included	12	$126.50
	3LG264H-WD-BN	PVD Brushed Nickel		12	$139.60

TWO HANDLE BATHROOM FAUCETS

	MODEL#	FINISH	DESCRIPTION	CASE	PRICE
	3LG130	Chrome	• Two-Handle Bathroom Faucet • Metal Lever Handles • 3-9/16" Reach, 1-15/16" From Deck to Aerator • Ceramic Disc Cartridges • 3-Hole 4" Installation • Brass Pop-Up Drain Assembly • With 1.2 GPM Flow Rate	12	$131.90

LEGACY

TUB & SHOWER TRIM SETS

	MODEL#	FINISH	DESCRIPTION	CASE	PRICE
	T-4LG100	Chrome	• Single-Handle Tub & Shower Trim Set • Metal Lever Handle • Ceramic Disc Cartridge With Temperature Limit Cap • Four-Function 3-3/8" Diameter Showerhead • Shower Arm and Flange • Combo 1/2" IPS/Slip-On Diverter Tub Spout With Escutcheon • With 1.75 GPM Flow Rate • For Use With V-2300B or V-2400B Series Valves – Valves Not Included	12	$179.90
	T-4LG100-BN	PVD Brushed Nickel		12	$231.80
	4LG100TX	Chrome	• Single-Handle Tub & Shower Trim Set • Metal Lever Handle • Stainless-Steel Pressure Balancing Spool • Four-Function 3-3/8" Diameter Showerhead • Shower Arm and Flange • Combo 1/2" IPS/Slip-On Diverter Tub Spout With Escutcheon • With 1.75 GPM Flow Rate	12	$184.50
	4LG100TX-BN	PVD Brushed Nickel		12	$206.90
	T-4LG300	Chrome	• Single-Handle Shower Trim Set • Metal Lever Handle • Ceramic Disc Cartridge With Temperature Limit Cap • Four-Function 3-3/8" Diameter Showerhead • Shower Arm and Flange • With 1.75 GPM Flow Rate • For Use With V-2300B or V-2400B Series Valves – Valves Not Included	12	$160.40
	T-4LG300-BN	PVD Brushed Nickel		12	$190.80
	T-4LG400	Chrome	• Single-Handle Valve Trim Set • Metal Lever Handle • Ceramic Disc Cartridge With Temperature Limit Cap • For Use With V-2300B or V-2400B Series Valves – Valves Not Included	12	$119.00
	T-4LG400-BN	PVD Brushed Nickel		12	$138.70

LEGACY

TUB & SHOWER TRIM SETS

	MODEL#	FINISH	DESCRIPTION	CASE	PRICE
	T-4LG100-ADA	Chrome	• Single-Handle Tub & Shower Trim Set With Handheld • Metal Lever Handles • Diverter Valve Trim • Ceramic Disc Cartridge With Temperature Limit Cap • Four-Function 3-3/8" Diameter Showerhead – 1.75 GPM With Shower Arm and Flange • Combo 1/2" IPS/Slip-On Tub Spout With Escutcheon • For Use With V-2300B or V-2400B Series Valves and 4100B Valves – Valves Not Included • Three-Function Handheld Showerhead With Non-Positive/Shut Off – 1.75 GPM With 60" Stainless-Steel Flex Hose • 24" Grab/Slide Bar and Brass Drop Ell With Vacuum Breaker	4	$446.50
	T-4LG300-ADA	Chrome	• Less Tub Spout	4	$411.30
	T-4LG400-ADA	Chrome	• Single-Handle Valve Trim Set With Handheld • Metal Lever Handle • Ceramic Disc Cartridge With Temperature Limit Cap • For Use With V-2300B or V-2400B Series Valves – Valves Not Included • Three-Function Handheld Showerhead With Non-Positive/Shut Off – 1.75 GPM • 24" Grab/Slide Bar • 60" Stainless-Steel Flex Hose • Brass Drop Ell With Vacuum Breaker	4	$368.10

DEL MAR

TWO HANDLE KITCHEN FAUCETS

	MODEL#	FINISH	DESCRIPTION	CASE	PRICE
	2DM201	Chrome	• Two-Handle Kitchen Faucet • Metal Lever Handles • Gooseneck 360 Degree Swivel Spout • 8-1/16" Reach, 6-11/16" From Deck to Aerator • Ceramic Disc Cartridges • 4-Hole 6" to 16" Installation • Side-Spray Assembly With Quick-Connect • With 1.5 GPM Flow Rate	6	$288.30
	2DM201-BN	PVD Brushed Nickel		6	$315.20
	2DM201-ORB	Oil Rubbed Bronze		6	$328.20
	2DM300	Chrome	• Two-Handle Kitchen Faucet • Metal Lever Handles • Gooseneck Spout Swivel 360 Degree • 8-1/16" Reach, 7-1/8" from Deck to Aerator • Ceramic Disc Cartridges • 3-Hole 8" Installation	6	$175.10
	2DM301	Chrome	• Two-Handle Kitchen Faucet • Metal Lever Handles • Gooseneck Spout Swivel 360 Degree • 8-1/16" Reach, 7-1/8" From Deck to Aerator • Ceramic Disc Cartridges • 4-Hole 8" Installation • Side-Spray Assembly • With 1.5 GPM Flow Rate	6	$190.20
	2DM301-BN	PVD Brushed Nickel		6	$215.30
	2DM301-MZ NEW	Moroccan Bronze		6	$241.28

DEL MAR

TWO HANDLE BATHROOM FAUCETS

	MODEL#	FINISH	DESCRIPTION	CASE	PRICE
	3DM100	Chrome	• Two-Handle Bathroom Faucet • Metal Lever Handles • 6-1/16" Reach, 2-1/8" From Deck to Aerator • Ceramic Disc Cartridges • 3-Hole 4" Installation • Brass Pop-Up Drain Assembly • With 1.2 GPM Flow Rate	6	$178.40
	3DM100-BN	PVD Brushed Nickel		6	$197.00
	3DM200	Chrome	• Two-Handle Bathroom Widespread Faucet • Metal Lever Handles • Rigid C-Style Spout • 5-7/8" Reach, 2-1/8" From Deck to Aerator • Ceramic Disc Cartridges • 3-Hole 6" to 16" Installation • Brass Pop-Up Drain Assembly • With 1.2 GPM Flow Rate • Easy-Install Mounting Nut	6	$303.50
	3DM200-BN	PVD Brushed Nickel		6	$324.60
	3DM300	Chrome	• Two-Handle Bathroom Widespread Faucet • Metal Lever Handles • Rigid J-Style Spout • 4-5/8" Reach, 3-7/8" From Deck to Aerator • Ceramic Disc Cartridges • 3-Hole 6" to 16" Installation • Brass Pop-Up Drain Assembly • With 1.2 GPM Flow Rate • Easy-Install Mounting Nut	6	$290.60
	3DM300-ORB	Oil Rubbed Bronze		6	$341.80

DEL MAR

TUB & SHOWER TRIM SETS

	MODEL#	FINISH	DESCRIPTION	CASE	PRICE
	T-4DM100	Chrome	• Single-Handle Tub & Shower Trim Set • Metal Lever Handle • Ceramic Disc Cartridge With Temperature Limit Cap • Single-Function 3-3/8" Standard Showerhead • Shower Arm and Flange • Combo 1/2" IPS/Slip-On Diverter Tub Spout With Escutcheon • With 1.75 GPM Flow Rate • For Use With V-2300B or V-2400B Series Valves – Valves Not Included	12	$155.50
	T-4DM100-BN	PVD Brushed Nickel		12	$200.10
	4DM100TX	Chrome	• Single-Handle Tub & Shower Trim Set • Metal Lever Handle • Stainless-Steel Pressure Balancing Spool • Single-Function 3-3/8" Standard Showerhead • Shower Arm and Flange • Combo 1/2" IPS/Slip-On Diverter Tub Spout With Escutcheon • With 1.75 GPM Flow Rate	12	$213.20
	4DM100TX-BN	PVD Brushed Nickel		12	$235.60
	4DM100TX-ORB	Oil Rubbed Bronze		12	$244.40
	T-4DM300	Chrome	• Single-Handle Shower Trim Set • Metal Lever Handle • Ceramic Disc Cartridge With Temperature Limit Cap • Single-Function 3-3/8" Standard Showerhead • Shower Arm and Flange • With 1.75 GPM Flow Rate • For Use With V-2300B or V-2400B Series Valves – Valves Not Included	12	$121.20
	T-4DM300-BN	PVD Brushed Nickel		12	$163.00
	T-4DM300-ORB	Oil Rubbed Bronze		12	$149.00

DEL MAR

HANDHELD SHOWER SETS

MODEL#	FINISH	DESCRIPTION	CASE	PRICE
6DM400	Chrome	• Handheld Shower Set • 25-1/8" Slide Bar With Brass Mounts • Five-Function Handheld Showerhead • Brass Drop Ell With Vacuum Breaker • 60" Stainless-Steel Flex Hose • With 1.75 GPM Flow Rate	6	$252.20
6DM400-BN	PVD Brushed Nickel		6	$272.80
6DM400-ORB	Oil Rubbed Bronze		6	$289.60

TWO HANDLE ROMAN TUB TRIM SETS

MODEL#	FINISH	DESCRIPTION	CASE	PRICE
T-4DM610	Chrome	• Two-Handle Roman Tub Trim Set • Metal Lever Handles • Rigid C-Style Spout • 7-1/2" Reach • 3-Hole 8" to 16" Installation • For Use With P-1131B Valve – Valve Not Included	6	$240.90
T-4DM610-BN	PVD Brushed Nickel		6	$259.90

AMERICANA

TWO HANDLE KITCHEN FAUCETS

	MODEL#	FINISH	DESCRIPTION	CASE	PRICE
	2AM400	Chrome	• Two-Handle Kitchen Faucet • Metal Lever Handles • 360 Degree Swivel Spout • 8-11/16" Reach, 10-1/4" From Deck to Aerator • Ceramic Disc Cartridges • 1-Hole Installation • Easy-Install 30" Flex Supply Lines With 3/8" Connections • With 1.5 GPM Flow Rate	6	$342.00
	2AM400-BN	PVD Brushed Nickel		6	$364.50
	2AM400-ORB	Oil Rubbed Bronze		6	$381.10
	2AM401	Chrome	• Two-Handle Kitchen Faucet • Metal Lever Handles • 360 Degree Swivel Spout • 8-11/16" Reach, 10-1/4" From Deck to Aerator • Ceramic Disc Cartridges • 2-Hole Installation • Brass Side-Spray Assembly With Quick-Connect • Easy-Install 30" Flex Supply Lines With 3/8" Connections • With 1.5 GPM Flow Rate	6	$437.40
	2AM401-BN	PVD Brushed Nickel		6	$472.50
	2AM401-ORB	Oil Rubbed Bronze		6	$517.60
	2AM500	Chrome	• Two-Handle Kitchen Bridge Faucet • Metal Lever Handles • 360 Degree Swivel Spout • 8-11/16" Reach, 9-7/16" From Deck to Aerator • Ceramic Disc Cartridges • 3-Hole 8" Installation • With 1.5 GPM Flow Rate	6	$351.10
	2AM500-BN	PVD Brushed Nickel		6	$363.30
	2AM501	Chrome	• Two-Handle Kitchen Bridge Faucet • Metal Lever Handles • 360 Degree Swivel Spout • 8-11/16" Reach, 9-7/16" From Deck to Aerator • Ceramic Disc Cartridges • 4-Hole 8" Installation • Brass Side-Spray Assembly With Quick-Connect • With 1.5 GPM Flow Rate	6	$446.30
	2AM501-BN	PVD Brushed Nickel		6	$493.60
	2AM501-ORB	Oil Rubbed Bronze		6	$526.90
	2AM501-MZ	Moroccan Bronze		6	$521.80

POT FILLERS

	MODEL#	FINISH	DESCRIPTION	CASE	PRICE
	2AM600	Chrome	• Wall Mount Pot Filler • Metal Lever Handles • Space-Saving Swivel Spout Folds in When Not in Use • 22-3/8" Spout Reach • Ceramic Disc Cartridges • 1-Hole Wall-Mount Installation • Designed for Cold Water • 1/2" IPS Connection With Flange • With 2.0 GPM Flow Rate	6	$325.50
	2AM600-BN	PVD Brushed Nickel		6	$340.20
	2AM600-ORB	Oil Rubbed Bronze		6	$360.60
	2AM600-MZ	Moroccan Bronze		6	$360.60
	2AM600-SS	PVD Stainless Steel		6	$347.10
	2AM700	Chrome	• Deck Mount Pot Filler • Metal Lever Handles • Space-Saving Swivel Spout Folds in When Not in Use • 19-3/8" Reach, 15-1/4" From Deck to Aerator • Ceramic Disc Cartridges • 1-Hole Deck-Mount Installation • Designed for Cold Water • Easy-Install 30" Flex Supply Lines With 3/8" Connections • With 2.0 GPM Flow Rate	6	$409.70
	2AM700-BN	PVD Brushed Nickel		6	$424.90
	2AM700-ORB	Oil Rubbed Bronze		6	$465.90

AMERICANA

TWO HANDLE BATHROOM WIDESPREAD FAUCETS

MODEL#	FINISH	DESCRIPTION	CASE	PRICE
3AM400	Chrome	• Two-Handle Bathroom Widespread Faucet • Metal Lever Handles • Rigid Spout • 6-11/16" Reach, 5" From Deck to Aerator • Ceramic Disc Cartridges • 3-Hole 6" to 16" Installation • Brass Pop-Up Drain Assembly • With 1.2 GPM Flow Rate	6	$330.40
3AM400-BN	PVD Brushed Nickel		6	$356.40
3AM400-ORB	Oil Rubbed Bronze		6	$379.80
3AM400-MZ	Moroccan Bronze		6	$387.20

AMERICANA

TUB & SHOWER TRIM SETS

MODEL#	FINISH	DESCRIPTION	CASE	PRICE
T-4AM100	Chrome	• Single-Handle Tub & Shower Trim Set • Metal Lever Handle • Ceramic Disc Cartridge With Temperature Limit Cap • Single Function 3-1/2" Diameter Showerhead • 13"-Long Shower Arm & Flange • Combo 1/2" IPS/Slip-On Diverter Tub Spout With Escutcheon • With 1.75 GPM Flow Rate • For Use With V-2300B or V-2400B Series Valves – Valves Not Included	6	$325.80
T-4AM100-BN	PVD Brushed Nickel		6	$375.80
T-4AM100-ORB	Oil Rubbed Bronze		6	$405.70

BRENTWOOD

TWO HANDLE BATHROOM FAUCETS

	MODEL#	FINISH	DESCRIPTION	CASE	PRICE
	3BR300	Chrome	• Two-Handle Bathroom Faucet • Metal Lever Handles • Gooseneck 360 Degree Swivel Spout • 4-7/8" Reach, 4-9/16" From Deck to Aerator • Ceramic Disc Cartridges • 3-Hole 4" Installation • Brass Pop-Up Drain Assembly • With 1.2 GPM Flow Rate	6	$147.40
	3BR300-BN	PVD Brushed Nickel		6	$164.60
	3BR300-ORB	Oil Rubbed Bronze		6	$175.60
	3BR310	Chrome	• Two-Handle Bathroom Faucet • Porcelain Lever Handles • Gooseneck 360 Degree Swivel Spout • 4-7/8" Reach, 4-9/16" From Deck to Aerator • Ceramic Disc Cartridges • 3-Hole 4" Installation • Brass Pop-Up Drain Assembly • With 1.2 GPM Flow Rate	6	$150.20
	3BR310-BN	PVD Brushed Nickel		6	$164.40
	3BR400	Chrome	• Two-Handle Bathroom Widespread Faucet • Metal Lever Handles • Rigid J-Style Spout • 4-5/8" Reach, 4-7/16" From Deck to Aerator • Ceramic Disc Cartridges • 3-Hole 6" to 16" Installation • Brass Pop-Up Drain Assembly • With 1.2 GPM Flow Rate	6	$286.50
	3BR400-BN	PVD Brushed Nickel		6	$297.30
	3BR400-ORB	Oil Rubbed Bronze		6	$311.20
	3BR410	Chrome	• Two-Handle Bathroom Widespread Faucet • Porcelain Lever Handles • Rigid J-Style Spout • 4-5/8" Reach, 4-7/16" From Deck to Aerator • Ceramic Disc Cartridges • 3-Hole 6" to 16" Installation • Brass Pop-Up Drain Assembly • With 1.2 GPM Flow Rate	6	$283.70
	3BR410-BN	PVD Brushed Nickel		6	$294.40

VALVES

PRESSURE BALANCE VALVES

	MODEL#	FINISH	DESCRIPTION	CASE	PRICE
	V-2300B	Rough Brass	· Single-Handle Tub & Shower Pressure-Balancing Valve · Combo CXC and IPS Inlet & Outlet · Pressure-Balancing Cartridge Ships With Trims · Brass Inlet Stops With Backflow Preventors · Stainless-Steel Mounting Bracket · Test Cap Allows Pressure Testing 150 PSI Max · Square Mud Guard With Leveler – Allows Right Angle Cuts · Thin- or Thick-Wall Mounting · Back-to-Back Installation	12	$72.70
	V-2300B-B	Rough Brass	· Builder Tract Pack	12	$68.50
	V-2300B-EP90D	Rough Brass	· Single-Handle Tub & Shower Pressure-Balancing Valve · Uponor PEX 90-Degree Down Inlet With Combo CXC & IPS Outlet · Pressure-Balancing Cartridge Ships With Trims · Brass Inlet Stops With Backflow Preventors · Stainless-Steel Mounting Bracket · Test Cap Allows Pressure Testing 150 PSI Max · Square Mud Guard With Leveler – Allows Right Angle Cuts · Thin- or Thick-Wall Mounting · Back-to-Back Installation	12	$85.60
	V-2300B-EP90U	Rough Brass	· Single-Handle Tub & Shower Pressure-Balancing Valve · Uponor PEX 90-Degree Up Inlet With Combo CXC & IPS Outlet · Pressure-Balancing Cartridge Ships With Trims · Brass Inlet Stops With Backflow Preventors · Stainless-Steel Mounting Bracket · Test Cap Allows Pressure Testing 150 PSI Max · Square Mud Guard With Leveler – Allows Right Angle Cuts · Thin- or Thick-Wall Mounting · Back-to-Back Installation	12	$85.60
	V-2301B	Rough Brass	· Single-Handle Tub & Shower Pressure-Balancing Valve · 1/2" PEX Inlet & Shower Outlet With Combo CXC & IPS Tub Outlet · Pressure-Balancing Cartridge Ships With Trims · Brass Inlet Stops With Backflow Preventors · Stainless-Steel Mounting Bracket · Test Cap Allows Pressure Testing 150 PSI Max · Square Mud Guard With Leveler – Allows Right Angle Cuts · Thin- or Thick-Wall Mounting · Back-to-Back Installation	12	$83.20
	V-2301B-B	Rough Brass	· Builder Tract Pack	12	$83.10
	V-2302B	Rough Brass	· Single-Handle Tub & Shower Pressure-Balancing Valve · 1/2" PEX Inlet & Shower Outlet With Combo CXC & IPS Tub Outlet · Pressure-Balancing Cartridge Ships With Trims · Brass Inlet Stops With Backflow Preventors · Stainless-Steel Mounting Bracket · Test Cap Allows Pressure Testing 150 PSI Max · Square Mud Guard With Leveler – Allows Right Angle Cuts · Thin- or Thick-Wall Mounting · Back-to-Back Installation	12	$82.70
	V-2302B-B	Rough Brass	· Builder Tract Pack	12	$84.70
	V-2303B	Rough Brass	· Single-Handle Tub & Shower Pressure-Balancing Valve · 1/2" CPVC Inlet With Combo CXC & IPS Outlet · Pressure-Balancing Cartridge Ships With Trims · Brass Inlet Stops With Backflow Preventors · Stainless-Steel Mounting Bracket · Test Cap Allows Pressure Testing 150 PSI Max · Square Mud Guard With Leveler – Allows Right Angle Cuts · Thin- or Thick-Wall Mounting · Back-to-Back Installation	12	$85.20
	V-2303B-B	Rough Brass	· Builder Tract Pack	12	$84.80

VALVES

PRESSURE BALANCE VALVES

	MODEL#	FINISH	DESCRIPTION	CASE	PRICE
	V-2304B	Rough Brass	• Single-Handle Tub & Shower Pressure-Balancing Valve • 1/2" PEX Inlet & Shower Outlet With Copper Stub Tub Outlet • Pressure-Balancing Cartridge Ships With Trims • Brass Inlet Stops With Backflow Preventors • Stainless-Steel Mounting Bracket • Test Cap Allows Pressure Testing 150 PSI Max • Square Mud Guard With Leveler – Allows Right Angle Cuts • Thin- or Thick-Wall Mounting • Back-to-Back Installation	6	$104.60
	V-2304B-B	Rough Brass	• Builder Tract Pack	6	$104.50
	V-2305B	Rough Brass	• Single-Handle Tub & Shower Pressure-Balancing Valve • 1/2" PEX Inlet With Combo CXC & IPS Outlet • Pressure-Balancing Cartridge Ships With Trims • Brass Inlet Stops With Backflow Preventors • Stainless-Steel Mounting Bracket • Test Cap Allows Pressure Testing 150 PSI Max • Square Mud Guard With Leveler – Allows Right Angle Cuts • Thin- or Thick-Wall Mounting • Back-to-Back Installation	12	$75.60
	V-2305B-B	Rough Brass	• Builder Tract Pack	12	$76.00
	V-2306B	Rough Brass	• Single-Handle Tub & Shower Pressure-Balancing Valve • 1/2" PEX Inlet & Shower Outlet With Copper Stub Tub Outlet • Pressure-Balancing Cartridge Ships With Trims • Brass Inlet Stops With Backflow Preventors • Stainless-Steel Mounting Bracket • Test Cap Allows Pressure Testing 150 PSI Max • Square Mud Guard With Leveler – Allows Right Angle Cuts • Thin- or Thick-Wall Mounting • Back-to-Back Installation	6	$102.80
	V-2306B-B	Rough Brass	• Builder Tract Pack	6	$99.70
	V-2307B	Rough Brass	• Single-Handle Tub & Shower Pressure-Balancing Valve • 1/2" Uponor or Cold-Expansion PEX Inlet With Combo CXC & IPS Outlet • Pressure-Balancing Cartridge Ships With Trims • Brass Inlet Stops With Backflow Preventors • Stainless-Steel Mounting Bracket • Test Cap Allows Pressure Testing 150 PSI Max • Square Mud Guard With Leveler – Allows Right Angle Cuts • Thin- or Thick-Wall Mounting • Back-to-Back Installation	12	$74.50
	V-2307B-B	Rough Brass	• Builder Tract Pack	12	$73.90
	V-2308B	Rough Brass	• Single-Handle Tub & Shower Pressure-Balancing Valve • 1/2" Uponor or Cold-Expansion PEX Inlet & Shower Outlet With Combo CXC & IPS Tub Outlet • Pressure-Balancing Cartridge Ships With Trims • Brass Inlet Stops With Backflow Preventors • Stainless-Steel Mounting Bracket • Test Cap Allows Pressure Testing 150 PSI Max • Square Mud Guard With Leveler – Allows Right Angle Cuts • Thin- or Thick-Wall Mounting • Back-to-Back Installation	12	$78.10
	V-2308B-B	Rough Brass	• Builder Tract Pack	12	$75.80
	V-2309B	Rough Brass	• Single-Handle Tub & Shower Pressure-Balancing Valve • 1/2" Uponor or Cold-Expansion PEX Inlet & Shower Outlet With Copper Stub Tub Outlet • Pressure-Balancing Cartridge Ships With Trims • Brass Inlet Stops With Backflow Preventors • Stainless-Steel Mounting Bracket • Test Cap Allows Pressure Testing 150 PSI Max • Square Mud Guard With Leveler – Allows Right Angle Cuts • Thin- or Thick-Wall Mounting • Back-to-Back Installation	6	$97.90
	V-2309B-B	Rough Brass	• Builder Tract Pack	6	$96.40

VALVES

PRESSURE BALANCE VALVES

	MODEL#	FINISH	DESCRIPTION	CASE	PRICE
	V-2309B-EP90D	Rough Brass	· Single-Handle Tub & Shower Pressure-Balancing Valve · 1/2" Uponor or Cold-Expansion PEX 90-Degree Down Inlet & Shower Outlet With Copper Stub Tub Outlet · Pressure-Balancing Cartridge Ships With Trims · Brass Inlet Stops With Backflow Preventors · Stainless-Steel Mounting Bracket · Test Cap Allows Pressure Testing 150 PSI Max · Square Mud Guard With Leveler – Allows Right Angle Cuts · Thin- or Thick-Wall Mounting · Back-to-Back Installation	6	$109.60
	V-2309B-EP90U	Rough Brass	· Single-Handle Tub & Shower Pressure-Balancing Valve · 1/2" Uponor or Cold-Expansion PEX 90-Degree Up Inlet & Shower Outlet With Copper Stub Tub Outlet · Pressure-Balancing Cartridge Ships With Trims · Brass Inlet Stops With Backflow Preventors · Stainless-Steel Mounting Bracket · Test Cap Allows Pressure Testing 150 PSI Max · Square Mud Guard With Leveler – Allows Right Angle Cuts · Thin- or Thick-Wall Mounting · Back-to-Back Installation	6	$109.60
	V-2311B	Rough Brass	· Single-Handle Tub & Shower Pressure-Balancing Valve · 1/2" CPVC Inlet & Shower Outlet With Combo CXC & IPS Tub Outlet · Pressure-Balancing Cartridge Ships With Trims · Brass Inlet Stops With Backflow Preventors · Stainless-Steel Mounting Bracket · Test Cap Allows Pressure Testing 150 PSI Max · Square Mud Guard With Leveler – Allows Right Angle Cuts · Thin- or Thick-Wall Mounting · Back-to-Back Installation	12	$88.00
	V-2311B-B	Rough Brass	· Back-to-Back Installation, Builder Tract Pack	12	$86.40
	V-2312B-B	Rough Brass	· Single-Handle Tub & Shower Pressure-Balancing Valve · 1/2" PEX Inlet & Shower Outlet With Copper Stub · Tub Outlet · Pressure-Balancing Cartridge Ships With Trims · Brass Inlet Stops With Backflow Preventors · Stainless-Steel Mounting Bracket · Test Cap Allows Pressure Testing 150 PSI Max · Square Mud Guard With Leveler – Allows Right Angle Cuts · Thin- or Thick-Wall Mounting · Back-to-Back Installation, Builder Tract Pack	12	$99.40
	V-2316B	Rough Brass	· Single-Handle Tub & Shower Pressure-Balancing Valve · 1/2" FIP Inlet & Outlet · Pressure-Balancing Cartridge Ships With Trims · Brass Inlet Stops With Backflow Preventors · Stainless-Steel Mounting Bracket · Test Cap Allows Pressure Testing 150 PSI Max · Square Mud Guard With Leveler – Allows Right Angle Cuts · Thin- or Thick-Wall Mounting · Back-to-Back Installation	12	$71.30
	V-2316B-B	Rough Brass	· Back-to-Back Installation, Builder Tract Pack	12	$67.90
	V-2400B	Rough Brass	· Single-Handle Tub & Shower Pressure-Balancing Valve · Combo CXC and IPS Inlet & Outlet · Pressure-Balancing Cartridge Ships With Trims · Stainless-Steel Mounting Bracket · Test Cap Allows Pressure Testing 150 PSI Max · Square Mud Guard With Leveler – Allows Right Angle Cuts · Thin- or Thick-Wall Mounting · Back-to-Back Installation	12	$56.40
	V-2400B-B	Rough Brass	· Builder Tract Pack	12	$56.60

VALVES

PRESSURE BALANCE VALVES

	MODEL#	FINISH	DESCRIPTION	CASE	PRICE
	V-2402B	Rough Brass	• Single-Handle Tub & Shower Pressure-Balancing Valve • 1/2" PEX Inlet & Shower Outlet With Combo CXC & IPS Tub Outlet • Pressure-Balancing Cartridge Ships With Trims • Stainless-Steel Mounting Bracket • Test Cap Allows Pressure Testing 150 PSI Max • Square Mud Guard With Leveler – Allows Right Angle Cuts • Thin- or Thick-Wall Mounting • Back-to-Back Installation	12	$75.80
	V-2402B-B	Rough Brass	• Builder Tract Pack	12	$77.00
	V-2403B	Rough Brass	• Single-Handle Tub & Shower Pressure-Balancing Valve • 1/2" CPVC Inlet With Combo CXC & IPS Outlet • Pressure-Balancing Cartridge Ships With Trims • Stainless-Steel Mounting Bracket • Test Cap Allows Pressure Testing 150 PSI Max • Square Mud Guard With Leveler – Allows Right Angle Cuts • Thin- or Thick-Wall Mounting • Back-to-Back Installation	12	$66.80
	V-2403B-B	Rough Brass	• Builder Tract Pack	12	$66.10
	V-2404B	Rough Brass	• Single-Handle Tub & Shower Pressure-Balancing Valve • 1/2" PEX Inlet & Shower Outlet With Copper Stub Tub Outlet • Pressure-Balancing Cartridge Ships With Trims • Stainless-Steel Mounting Bracket • Test Cap Allows Pressure Testing 150 PSI Max • Square Mud Guard With Leveler – Allows Right Angle Cuts • Thin- or Thick-Wall Mounting • Back-to-Back Installation	6	$96.60
	V-2404B-B	Rough Brass	• Builder Tract Pack	6	$96.30
	V-2405B	Rough Brass	• Single-Handle Tub & Shower Pressure-Balancing Valve • 1/2" PEX Inlet With Combo CXC & IPS Outlet • Pressure-Balancing Cartridge Ships With Trims • Stainless-Steel Mounting Bracket • Test Cap Allows Pressure Testing 150 PSI Max • Square Mud Guard With Leveler – Allows Right Angle Cuts • Thin- or Thick-Wall Mounting • Back-to-Back Installation	12	$59.50
	V-2405B-B	Rough Brass	• Builder Tract Pack	12	$60.30
	V-2407B	Rough Brass	• Single-Handle Tub & Shower Pressure-Balancing Valve • 1/2" Uponor PEX Inlet With Combo CXC & IPS Outlet • Pressure-Balancing Cartridge Ships With Trims • Stainless-Steel Mounting Bracket • Test Cap Allows Pressure Testing 150 PSI Max • Square Mud Guard With Leveler – Allows Right Angle Cuts • Thin- or Thick-Wall Mounting • Back-to-Back Installation	12	$59.60
	V-2407B-B	Rough Brass	• Builder Tract Pack	12	$58.60
	V-2408B	Rough Brass	• Single-Handle Tub & Shower Pressure-Balancing Valve • 1/2" Uponor PEX Inlet & Shower Outlet With Combo CXC & IPS Tub Outlet • Pressure-Balancing Cartridge Ships With Trims • Stainless-Steel Mounting Bracket • Test Cap Allows Pressure Testing 150 PSI Max • Square Mud Guard With Leveler – Allows Right Angle Cuts • Thin- or Thick-Wall Mounting • Back-to-Back Installation	12	$69.50
	V-2408B-B	Rough Brass	• Builder Tract Pack	12	$67.50

VALVES

PRESSURE BALANCE VALVES

	MODEL#	FINISH	DESCRIPTION	CASE	PRICE
	V-2410B	Rough Brass	• Single-Handle Tub & Shower Pressure-Balancing Valve • 1/2" CPVC Inlet & Shower Outlet With Copper Stub Tub Outlet • Pressure-Balancing Cartridge Ships With Trims • Stainless-Steel Mounting Bracket • Test Cap Allows Pressure Testing 150 PSI Max • Square Mud Guard With Leveler – Allows Right Angle Cuts • Thin- or Thick-Wall Mounting • Back-to-Back Installation	12	$97.80
	V-2411B	Rough Brass	• Single-Handle Tub & Shower Pressure-Balancing Valve • 1/2" CPVC Inlet & Shower Outlet With Combo CXC & IPS Tub Outlet • Pressure-Balancing Cartridge Ships With Trims • Stainless-Steel Mounting Bracket • Test Cap Allows Pressure Testing 150 PSI Max • Square Mud Guard With Leveler – Allows Right Angle Cuts • Thin- or Thick-Wall Mounting • Back-to-Back Installation	12	$84.60
	V-2412B	Rough Brass	• Single-Handle Tub & Shower Pressure-Balancing Valve • 1/2" PEX Inlet & Shower Outlet With Copper Stub Tub Outlet • Pressure-Balancing Cartridge Ships With Trims • Stainless-Steel Mounting Bracket • Test Cap Allows Pressure Testing 150 PSI Max • Square Mud Guard With Leveler – Allows Right Angle Cuts • Thin- or Thick-Wall Mounting • Back-to-Back Installation	6	$92.10
	V-2415B	Rough Brass	• Single-Handle Tub & Shower Pressure-Balancing Valve • 1/2" PEX Inlet & Shower Outlet With Capped Combo CXC & IPS Tub Outlet • Pressure-Balancing Cartridge Ships With Trims • Stainless-Steel Mounting Bracket • Test Cap Allows Pressure Testing 150 PSI Max • Square Mud Guard With Leveler – Allows Right Angle Cuts • Thin- or Thick-Wall Mounting • Back-to-Back Installation	12	$68.30
	V-2416B	Rough Brass	• Single-Handle Tub & Shower Pressure-Balancing Valve • 1/2" FIP Inlet & Outlet • Pressure-Balancing Cartridge Ships With Trims • Stainless-Steel Mounting Bracket • Test Cap Allows Pressure Testing 150 PSI Max • Square Mud Guard With Leveler – Allows Right Angle Cuts • Thin- or Thick-Wall Mounting • Back-to-Back Installation	12	$54.70
	V-2416B-B	Rough Brass	• Builder Tract Pack	12	$54.20
	V-2500B	Brass	• Single-Handle Tub & Shower Pressure-Balancing Valve With Built-In 2-Way Diverter • Combo CXC and IPS Inlet & Outlet • Pressure-Balancing Two-Way Diverter Cartridge • Brass Inlet Stops With Backflow Preventers • Stainless-Steel Mounting Bracket • Test Cap Allows Pressure Testing 150 PSI Max • Square Mud Guard With Leveler – Allows Right Angle Cuts • Thin- or Thick-Wall Mounting • Back-to-Back Installation	12	$131.60

VALVES

TUB VALVES

		MODEL#	FINISH	DESCRIPTION	CASE	PRICE
	CA	4100B	Rough Brass	• Single-Handle Diverter Valve Set • Combo CXC and IPS Connections • Three-Way Diverter Valve • Ceramic Disc Cartridge	12	$89.00
		4400B	Rough Brass	• Single-Handle Freestanding Tub Filler Valve Set • Metal Construction • Floor Joist Mounting Kit • 1/2" CC/MNPT-Type Connections • Sturdy Mounting Bracket Included With Valve • Expandable Mounting Brackets for Joists Between 12" and 24" Apart • Integral Stop Assemblies with Backflow Preventers	6	$296.50
		4410B	Rough Brass	• Single-Handle Freestanding Tub Filler Valve Set • Metal Construction • Floor Mounting • 1/2" CC/MNPT-Type Connections • Sturdy Mounting Bracket Included With Valve • Integral Stop Assemblies with Backflow Preventers	12	$206.00

ACCESSORIES

SHOWERHEADS

	MODEL#	FINISH	DESCRIPTION	CASE	PRICE
	X-6400078	Chrome	• Single-Function 6" Square Rain Showerhead • Rub-Clean Anti-Scale Spray • Brass Ball Swivel Joint • 1.5 GPM Flow Rate	18	$45.10
	X-6400088	Chrome	• Single-Function 6" Square Rain Showerhead • Rub-Clean Anti-Scale Spray • Brass Ball Swivel Joint • 1.75 GPM @ 80 PSI	- - -	$42.70
	X-6400038	Chrome	• Single-Function Rain Showerhead With Shower Arm and Flange • Rub-Clean Anti-Scale Spray • Brass Ball Swivel Joint • 8" Face • 15" L-Shape Shower Arm and Shower Arm Flange	6	$274.00
	X-6400055	Chrome	• Single-Function Rain Showerhead – 1.5 GPM • Rub-Clean Anti-Scale Spray • Brass Ball Swivel Joint • 6" Face	18	$59.00
	X-6400055-BN	PVD Brushed Nickel		18	$63.40
	X-6400095	Chrome	• Five-Function Showerhead • Rub-Clean Anti-Scale Spray • Brass Ball Swivel Joint • 3" Face • 1.75 GPM @ 80 PSI	- - -	$64.90
	X-6400045	Chrome	• Four-Function Showerhead – 1.5 GPM • Rub-Clean Anti-Scale Spray • Brass Ball Swivel Joint • 3-3/8" Face	65	$47.60
	X-6400045-BN	PVD Brushed Nickel		65	$49.30
	X-6400012	Chrome	• Single-Function Rain Showerhead • Rub-Clean Anti-Scale Spray • Brass Ball Swivel Joint • 8" Face	6	$71.70

ACCESSORIES

SHOWERHEADS

	MODEL#	FINISH	DESCRIPTION	CASE	PRICE
	X-6400013	Chrome	• 14” L-Shape Shower Arm and Shower Arm Flange	6	$67.20
	X-6400004	Chrome	• Single-Function Showerhead • Rub-Clean Anti-Scale Spray • Brass Ball Swivel Joint • 3-1/2” Face	21	$131.80
	X-6400057	Chrome	• Single-Function Showerhead – 1.5 GPM	- - -	$140.10
	X-6400097	Chrome	• 1.75 GPM @ 80 PSI	- - -	$133.60
	X-6400052	Chrome	• Single-Function Standard Showerhead – 1.5 GPM • Rub-Clean Anti-Scale Spray • Brass Ball Swivel Joint • 3-3/8” Face	30	$35.20
	X-6400052-BN	PVD Brushed Nickel		30	$41.90
	X-6400079	Chrome	• Four-Function Showerhead • Rub-Clean Anti-Scale Spray • Brass Ball Swivel Joint • 3-3/8” Face • 1.75 GPM @ 80 PSI	- - -	$37.50
	X-6400081	Chrome	• Single-Function Standard Showerhead • Rub-Clean Anti-Scale Spray • Brass Ball Swivel Joint • 3-3/8” Face • 1.75 GPM @ 80 PSI	- - -	$27.30
	X-6400081-BN	PVD Brushed Nickel		- - -	$41.90
	X-6400085	Chrome	• 12” Ceiling-Mount Shower Arm and Shower-Arm Flange	- - -	$72.90
	X-6400085-BN	PVD Brushed Nickel		- - -	$83.60
	X-6400085-MB	Matte Black		- - -	$83.60

ACCESSORIES

LUXFLOW SHOWERHEADS

	MODEL#	FINISH	DESCRIPTION	CASE	PRICE
	SH-401	Chrome	• Single-Function Standard Showerhead • Rub-Clean Anti-Scale Spray • Brass Ball Swivel Joint • 3-3/8" Face • With Air-Inject Turbine Technology • 1.75 GPM @ 80 PSI	- - -	$27.60
	SH-401-BN	PVD Brushed Nickel			$35.20
	SH-402	Chrome	• Single-Function Square Showerhead • Rub-Clean Anti-Scale Spray • Brass Ball Swivel Joint • 4" Face • With Air-Inject Turbine Technology • 1.75 GPM @ 80 PSI	- - -	$43.70
	SH-402-BN	PVD Brushed Nickel			$49.40
	SH-403	Chrome	• Single-Function Round Showerhead • Rub-Clean Anti-Scale Spray • Brass Ball Swivel Joint • 3-3/4" Face • With Air-Inject Turbine Technology • 1.75 GPM @ 80 PSI	- - -	$37.10
	SH-403-BN	PVD Brushed Nickel			$42.80
	SH-601	Chrome	• Single-Function Rain Showerhead • Rub-Clean Anti-Scale Spray • Brass Ball Swivel Joint • 6" Face • With Air-Inject Turbine Technology • 1.75 GPM @ 80 PSI	- - -	$46.60
	SH-601-BN	PVD Brushed Nickel			$53.20
	SH-602	Chrome	• Single-Function Rain Showerhead • Rub-Clean Anti-Scale Spray • Brass Ball Swivel Joint • 6" Face • With Air-Inject Turbine Technology • 1.75 GPM @ 80 PSI	40	$46.60
	SH-602-BN	PVD Brushed Nickel		- - -	$53.20

ACCESSORIES

DRAINS: WASTE & OVERFLOW

	MODEL#	FINISH	DESCRIPTION	CASE	PRICE
	X-6400029	Chrome	• Bath Waste & Overflow – Tip-Toe Bath Strainer; 1-1/2" Coarse Thread	100	$26.70
	X-6400029-BN	PVD Brushed Nickel		100	$27.80
	X-6400030	Chrome	• Bath Waste & Overflow – Lift & Lock Strainer; 1-1/2" Coarse Thread	100	$21.80
	X-6400030-BN	PVD Brushed Nickel		100	$23.20
	X-6400030-ORB	Oil Rubbed Bronze		100	$25.70
	X-6400031	Chrome	• Bath Waste & Overflow – Trip-Lever Faceplate With Screws	100	$17.40
	X-6400031-BN	PVD Brushed Nickel		100	$18.40
	X-6400031-ORB	Oil Rubbed Bronze		100	$21.20
	X-6400032	Chrome	• Bath Waste & Overflow – 2-Hole Faceplate With Screws	200	$12.40
	X-6400032-ORB	Oil Rubbed Bronze		200	$15.30
	X-6400033	Chrome	• Bath Waste & Overflow – 1-Hole Faceplate With Screw	200	$11.50
	X-6400033-BN	PVD Brushed Nickel		200	$12.40
	X-6400033-ORB	Oil Rubbed Bronze		200	$13.60

ACCESSORIES

DRAINS: WASTE & OVERFLOW

	MODEL#	FINISH	DESCRIPTION	CASE	PRICE
	X-6400034	Chrome	• Bath Waste & Overflow – Grid Strainer With Screw	200	$9.80
	X-6400034-BN	PVD Brushed Nickel		200	$10.70
	X-6400034-ORB	Oil Rubbed Bronze		200	$11.70
	X-6300010	Chrome	• Push-Down Drain Without Overflow	25	$69.70
	X-6300011	Chrome	• Push-Down Drain With Overflow	25	$73.70

ACCESSORIES

MISCELLANEOUS

	MODEL#	FINISH	DESCRIPTION	CASE	PRICE
	X-6200001	Chrome	• Soap/Lotion Dispenser • Heavy Metal Dispenser • Plastic Bottle • Solid Brass • Fits 2” Thick Deck	- - -	$48.30
	X-6200002	Chrome	• Soap/Lotion Dispenser • Heavy Metal Dispenser • Plastic Bottle • Solid Brass • Fits 2” Thick Deck	- - -	$53.60
	X-4900117		• Genuine Pioneer Products Repair Parts Kit	- - -	$423.20

PARTS

CERAMIC DISC CARTRIDGES

	MODEL / DESCRIPTION	PRICE	FOR USE WITH	
	X-3200001 Ceramic Disc Cartridge	$17.00	**KITCHEN** 2BL220 2CL250 2GB250 2LG220 2MT250	**TUB AND SHOWER** 4MT710 4MT711 4MT720
	X-3400002 Ceramic Disc Cartridge	$14.70	**TUB AND SHOWER** 990512	
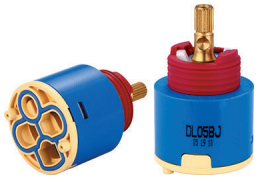	**X-3400003** Ceramic Disc Cartridge	$22.90	**VALVES** 1910B	
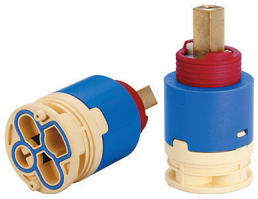	**X-3400007** Ceramic Disc Cartridge	$52.50	**KITCHEN** 4AM100T 4AM200T 4AM300T 4AM400T 4BL100T 4BL200T 4BL300T 4BL400T 4BR100T 4BR110T 4BR120T 4BR130T 4BR200T 4BR210T 4BR220T 4BR230T 4BR300T 4BR310T 4BR320T	**TUB & SHOWER** 4BR330T 4CB100T 4CB200T 4CB300T 4CB400T 4CL100T 4CL200T 4CL300T 4CS100T 4CS200T 4CS300T 4DM100T 4DM200T 4DM300T 4DM400T 4GB100T 4GB110T 4GB300T 4GB310T 4LG100T 4LG300T 4MT100T 4MT110T 4MT120T 4MT200T 4MT300T 4MT320T 4MT400T 4PR100T 4PR110T 4PR300T 4PR310T 4PR400T **VALVES** 4020B

PARTS

CERAMIC DISK CARTRIDGES

	MODEL / DESCRIPTION	PRICE	FOR USE WITH			
	X-3600001 Ceramic Disc Cartridge	$24.70	**VALVES**			
			199731B			
	X-3600003 Ceramic Disc Cartridge	$21.50	**TUB & SHOWER**		**VALVES**	
			6AM101T 6CB101T 6CS101T 6DM101T 6GB101T	6LG101T 6PR101T 4020B-D 4100B	4020B-D 4100B	
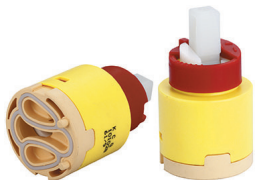	**X-3900003** Ceramic Disc Cartridge	$14.90	**KITCHEN**	**BATHROOM**		
			2MT170H 2MT171H	3LG160 3LG181 3LG161	3MT180 3LG170 3MT181	3LG171 3MT181G 3LG180
	X-3900001 Ceramic Disc Cartridge	$14.00	**KITCHEN**		**BATHROOM**	**TUB & SHOWER**
			2LG160 2LG160H 2LG161 2LG161H 2LG162 2LG170 2LG171 2LG250 2LG260 2LG261 2MT160H 2MT161H	2MT330 2MT331 2MT340 2MT341 2PM160 2PM161 2VL160 2VL161 2VL260 2VL261	3MT160 3MT161 3MT161G 3MT166 3MT168 3MT170 3MT171 3MT171G 3MT176 3MT178 3MT800 3PM160	4MT840

PARTS

CERAMIC STEMS & WASHERLESS CARTRIDGES

	MODEL / DESCRIPTION	PRICE	FOR USE WITH				
	X-3200003 Ceramic Stem	$16.10	**KITCHEN** 2PM440 2PM540				
	X-3400001 Washerless Cartridge	$10.80	**VALVES** 4010B 4011B				
	X-3200004C Ceramic Stem – Cold **X-3200004H** Ceramic Stem – Hot	$26.20	**KITCHEN** 2AM400 2AM401 2AM500 2AM501				
	X-3900004C Ceramic Stem – Cold **X-3900004H** Ceramic Stem – Hot	$13.40	**KITCHEN** 2AM100 2AM101 2AM200 2AM201				
	X-3900002C Ceramic Stem – Cold **X-3900002H** Ceramic Stem – Hot	$12.30	**KITCHEN** 2BR100 2BR101 2BR110 2BR111 2BR120 2BR121 2BR130 2BR131 2BR200 2BR201 2BR210 2BR211 2BR220 2BR221 2BR230 2BR231 2CB200 2CB201 2DM100 2DM101 2DM200 2DM201 2DM300 2DM301 2LG100 2LG101 2LG110 2LG111 2LG120 2LG230 2LG231 2LG240 2MT200 2MT201 2MT210 2MT211 2PR200 2PR201 5DM100 5LG120 5LG220	**BATHROOM** 3BL100 3BL200 3BR100 3BR110 3BR120 3BR130 3BR200 3BR210 3BR220 3BR230 3BR300 3BR310 3BR320 3BR330 3BR400 3BR410 3BR420 3BR430 3BR500 3BR510 3BR520 3BR530 3CB100 3CB101 3CB200 3DM100 3DM101 3DM200 3DM300 3GB100 3GB200 3LG100 3LG101 3LG110 3LG111 3LG121 3LG121G 3LG130 3MT100 3MT110 3MT400 3MT500 3PR200	**TUB & SHOWER** 4AM610 4AM611 4BR600 4BR610 4BR620 4BR630 4BR700 4BR710 4BR720 4BR730 4BR800 4BR810 4BR820 4BR830 4GB611 4MT610 4MT611 4MT620 **VALVES** 4300B

PARTS

DIVERTER PISTONS, PRESSURE BALANCE SPOOLS & ASSOCIATED CARTRIDGE PARTS

	MODEL / DESCRIPTION	PRICE	FOR USE WITH			
	X-3200002 Stainless-Steel Ball	$3.70	**KITCHEN**		**BAR**	
			2PM330 2PM331		5PM330	
	X-4200046 Cam & Packing	$2.60	**KITCHEN**		**BAR**	
			2PM330 2PM331		5PM330	
	X-4900019 Springs & Seats	$1.50	**KITCHEN**		**BAR**	**VALVE**
			2PM330 2PM331		5PM330	4010B 4011B
	X-4200007 Diverter Piston	$2.60	**KITCHEN**			
			2LG161 2LG261 2LG161H 2MT161H	2LG162 2PM161 2LG171 2PM331		
	X-4200016 Diverter Piston	$8.80	**KITCHEN**			
			2AM101 2BR231 2AM201 2CB201 2AM401 2CL331 2AM501	2CS201 2BR101 2CS331 2BR111 2DM101 2BR121 2DM201	2BR131 2DM301 2BR201 2LG101 2BR211 2LG111 2BR221	2LG231 2MT171H 2MT201 2MT211 2MT331 2MT341 2PR201
	X-4400005 Pressure-Balance Spool	$48.40	**VALVES**			
			4010B 1910B 4011B			
	X-4400070 Pressure-Balance Spool	$38.60	**KITCHEN**			
			990512			

PARTS

EXTENSIONS & ADAPTERS

	MODEL / DESCRIPTION	PRICE	FOR USE WITH			
	X-4200015 Deck Plate Mounting Gasket	$4.20	**KITCHEN**		**BATHROOM**	
			2AM101 2BR221 2AM201 2BR231 2AM401 2CB201 2AM501 2CS201 2BR101 2CS331	2BR111 2DM101 2BR121 2DM201 2BR131 2DM301 2BR201 2LG101 2BR211 2LG111	2LG231 2MT161H 2MT171H 2MT201 2MT211 2MT331 2MT341 2PR201 2VL161 2VL261	
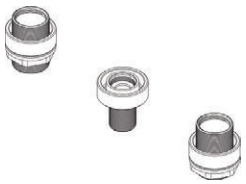	**X-4400089** 2” Valve Extension	$51.50	**KITCHEN**		**BAR**	**VALVES**
			4BR710 4CL610 4BR720 4CS610 4BR730 4BR810	4BR820 4BR830 4MT610 4BR800 4MT611	4AM610 4AM611 4BR600 4BR610 4BR620 4BR630 4BR700	4300B
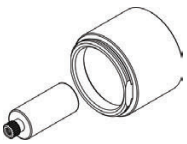	**X-4600045** 1” Diverter Valve Extension	$21.80	**VALVES**			
			4100B			
	X-4900105 1/2” NPT Shank Extension	$9.00	**BATHROOM**			**KITCHEN**
			3AM100 3BL100 3BR100 3BR110 3GB100 3BR120 3LG100 3BR130 3LG101 3BR200	3LG110 3BR210 3LG111 3BR220 3LG121 3BR230 3LG121G 3BR300 3LG130 3BR310	3MT100 3BR320 3MT110 3BR330 3PR100 3CB100 3CB101 3DM100 3DM101	4AM610 4AM611 4BR600 4BR610 4BR620 4BR630 4BR700
						BAR
						5LG120 5LG220
	X-5400008 IPS to CXC Adapter for X-6400051	$4.20	**TUB & SHOWER**			
			4MT110T 4MT120T			
	X-5400009 IPS to CXC Adapter for X-6400024	$6.30	**TUB & SHOWER**			
			4MT100T 4MT200T			
	X-5400010 Mounting Tool for X-5400008/X-5400009	$6.70	**VALVES**			
			4MT100T 4MT110T	4MT120T 4MT200T		

PARTS

PART #	DESCRIPTION	PCS/ CS	LIST PRICE
X-1200001	Lever Handle	- - -	$23.80
X-1200002	Loop Handle	- - -	$23.80
X-1200004	Lever Handle	- - -	$17.90
X-1200005C	Cross Handle – Cold	- - -	$16.00
X-1200005H	Cross Handle – Hot	- - -	$16.00
X-1200006	Lever Handle	- - -	$24.30
X-1200007C	Lever Handle – Cold	- - -	$51.00
X-1200007H	Lever Handle – Hot	- - -	$51.00
X-1200008C	Lever Handle – Cold	- - -	$54.20
X-1200008H	Lever Handle – Hot	- - -	$54.20
X-1200009	Primary Lever Handle	- - -	$58.40
X-1200010	Secondary Lever Handle	- - -	$29.20
X-1200011	Lever Handle	- - -	$23.80
X-1200012	Lever Handle	- - -	$26.00
X-1200016	Lever Handle	- - -	$20.30
X-1200018	Lever Handle	- - -	$33.50
X-1200019	Lever Handle	- - -	$28.10
X-1300001	Lever Handle	- - -	$23.80
X-1300002	Loop Handle	- - -	$23.80
X-1300003	Acrylic Ball Handle	- - -	$8.90
X-1300004C	Lever Handle – Cold	- - -	$47.80
X-1300004H	Lever Handle – Hot	- - -	$47.80
X-1300006	Lever Handle	- - -	$19.80
X-1300019	Lever Handle	- - -	$25.70
X-1300020	Lever Handle	- - -	$34.60
X-1400002	Lever Handle	- - -	$31.30
X-1400006	Lever Handle	- - -	$44.60
X-1400025	Lever Handle	- - -	$20.30
X-1400026	Lever Handle	- - -	$32.10
X-1400028	Lever Handle	- - -	$39.00
X-1400029	Lever Handle	- - -	$92.40
X-1400043	Lever Handle	- - -	$34.60
X-1400044	Lever Handle	- - -	$34.60
X-1600001	Diverter Lever Handle	- - -	$33.50
X-1600011	Diverter Lever Handle	- - -	$32.40
X-1900001C	Acrylic Handle – Cold	- - -	$5.80
X-1900001H	Acrylic Handle – Hot	- - -	$5.80
X-1900002C	Mini Blade Handle – Cold	- - -	$11.70
X-1900002H	Mini Blade Handle – Hot	- - -	$11.70
X-1900003C	ADA Wrist Blade Handle – Cold	- - -	$19.50
X-1900003H	ADA Wrist Blade Handle – Hot	- - -	$19.50
X-1900004C	Lever Handle – Cold	- - -	$20.80
X-1900004H	Lever Handle – Hot	- - -	$20.80
X-1900005	Lever Handle	- - -	$23.80
X-1900007C	Lever Handle – Cold	- - -	$50.00
X-1900007H	Lever Handle – Hot	- - -	$50.00
X-1900008	Lever Handle	- - -	$23.80
X-1900009C	Lever Handle – Cold	- - -	$31.30
X-1900009H	Lever Handle – Hot	- - -	$31.00
X-1900010C	Porcelain Lever Handle – Cold	- - -	$19.50
X-1900010H	Porcelain Lever Handle – Hot	- - -	$19.50
X-1900011C	Porcelain Cross Handle – Cold	- - -	$17.30
X-1900011H	Porcelain Cross Handle – Hot	- - -	$17.30
X-1900012C	Beaux Lever Handle – Cold	- - -	$22.70
X-1900012H	Beaux Lever Handle – Hot	- - -	$22.70

PART #	DESCRIPTION	PCS/ CS	LIST PRICE
X-2200001	Spout Set	- - -	$69.00
X-2200002	Spout Set	- - -	$69.00
X-2200003	High-Rise Spout Set	- - -	$72.20
X-2200004	High Gooseneck Spout Set	- - -	$108.30
X-2200005	High Gooseneck Spout Set	- - -	$156.00
X-2200008	High Tubular Spout	- - -	$47.80
X-2200009	Tubular Spout	- - -	$46.80
X-2200012	Spout Set	- - -	$175.10
X-2200013	Spout Set	- - -	$175.50
X-2200014	Gooseneck Spout Set	- - -	$190.00
X-2200015	90-Degree Spout Set	- - -	$203.80
X-2200017	Gooseneck Spout Set	- - -	$190.00
X-2200018	Bent-Nose Spout Set	- - -	$83.90
X-2200019	Gooseneck Spout Set	- - -	$105.10
X-2300001	C-Spout	- - -	$163.50
X-2300002	J-Spout	- - -	$149.30
X-2300003	Spout Set	- - -	$182.60
X-2300004	Gooseneck Spout Set	- - -	$167.70
X-2300006	Gooseneck Spout Set	- - -	$93.40
X-2300008	11” Spout Set	- - -	$145.40
X-2300009	J-Spout Set	- - -	$140.10
X-2300021	Square Spout	- - -	$182.60
X-2400001	Spout Set	- - -	$109.30
X-2400003	C-Spout	- - -	$214.40
X-2400007	Bent-Nose Spout Set	- - -	$228.10
X-2400008	Bent-Nose Spout Set	- - -	$250.40
X-2400019	Rigid Spout	- - -	$353.60
X-2400020	Rigid Diverter Spout	- - -	$408.50
X-2400021	Slip-On Spout Set	- - -	$136.60
X-2500001	5-3/16” Reach Gooseneck Spout	- - -	$47.80
X-2500002	3-5/8” Reach Gooseneck Spout	- - -	$55.30
X-2500003	Gooseneck Rigid Spout	- - -	$105.10
X-3200001	Ceramic Disc Cartridge	- - -	$17.00
X-3200002	Stainless-Steel Ball	- - -	$3.70
X-3200003	Ceramic Stem	- - -	$16.10
X-3200004C	Ceramic Stem – Cold	- - -	$26.20
X-3200004H	Ceramic Stem – Hot	- - -	$26.20
X-3300002C	Ceramic Stem – Cold	- - -	$14.20
X-3300002H	Ceramic Stem – Hot	- - -	$15.20
X-3300006	Ceramic Disc Cartridge	- - -	$15.50
X-3300007	Ceramic Disc Cartridge	- - -	$16.10
X-3400001	Washerless Cartridge	- - -	$10.80
X-3400002	Ceramic Disc Cartridge	- - -	$14.70
X-3400003	Ceramic Disc Cartridge	- - -	$22.90
X-3400004	Diverter Assembly	- - -	$127.90
X-3400007	Ceramic Disc Cartridge	- - -	$52.50
X-3600001	Ceramic Disc Cartridge	- - -	$24.70
X-3600003	Ceramic Disc Cartridge	- - -	$21.50
X-3900001	Ceramic Disc Cartridge	- - -	$14.00
X-3900002C	Ceramic Stem – Cold	- - -	$12.30
X-3900002H	Ceramic Stem – Hot	- - -	$12.30
X-3900003	Ceramic Disc Cartridge	- - -	$14.90
X-3900004C	Ceramic Stem – Cold	- - -	$13.40
X-3900004H	Ceramic Stem – Hot	- - -	$13.40
X-3900008	Ceramic Disc Cartridge	- - -	$17.00

PARTS

PART #	DESCRIPTION	PCS/ CS	LIST PRICE
X-4200001	Retainer Cap	- - -	$8.10
X-4200002	Retainer Nut	- - -	$5.00
X-4200003	Spout Gasket	- - -	$0.90
X-4200004	Spout O-Ring	- - -	$1.50
X-4200005	Deck Plate	- - -	$33.00
X-4200006	Deck Plate Mounting Gasket	- - -	$2.60
X-4200007	Diverter Piston	- - -	$2.60
X-4200010	Deck Plate for Spray-on Deck Faucet	- - -	$31.90
X-4200011	Spout Retainer Nut and Washer	- - -	$3.70
X-4200012	Spout O-Ring	- - -	$1.50
X-4200013	Spout Gasket	- - -	$1.70
X-4200014	Deck Plate	- - -	$26.50
X-4200015	Deck Plate Mounting Gasket	- - -	$4.20
X-4200016	Diverter Piston	- - -	$8.80
X-4200017	High-Rise Spout Sleeve	- - -	$24.30
X-4200018	Side-Spray Assembly	- - -	$33.80
X-4200020	Gooseneck Spout Sleeve	- - -	$42.20
X-4200021	Gooseneck Spout Deck Plate	- - -	$30.80
X-4200022	Gooseneck Spout Deck Plate Mounting Gasket	- - -	$2.60
X-4200023	Gooseneck Spout Escutcheon	- - -	$19.10
X-4200025	Cross Connector	- - -	$38.60
X-4200032	Spout Washer	- - -	$4.80
X-4200041	Spray-Head Hose Weight	- - -	$9.70
X-4200043	Spout Escutcheon	- - -	$17.70
X-4200044	Hose	- - -	$10.00
X-4200045	Retainer Cap & Adjusting Ring	- - -	$7.00
X-4200046	Cam & Packing	- - -	$2.60
X-4200048	Base & Gasket	- - -	$14.60
X-4200049	Cap & Washer	- - -	$2.60
X-4200050	Handle Hole Cover	- - -	$1.50
X-4200051	Handle Allen Screw	- - -	$1.50
X-4200053	Spout Bonnet	- - -	$6.10
X-4200054	Handle Bonnet Nut	- - -	$8.90
X-4200055C	Cold Index	- - -	$3.70
X-4200055H	Hot Index	- - -	$3.70
X-4200056	Eccentric Elbow	- - -	$29.80
X-4200057	Elbow Flange	- - -	$10.00
X-4200058	Spout Retainer Cap	- - -	$6.40
X-4200089	Pull-Down Spray Head – 2.0 GPM	- - -	$40.60
X-4200090	Spout Snap Ring	- - -	$1.50
X-4200109	Escutcheon	- - -	$27.60
X-4200111	Spray-Head Flex Hose	- - -	$26.20
X-4200112	Spout Repair Kit	- - -	$1.90
X-4200113	Washer	- - -	$0.90
X-4200114	Female 55/64” Thread Aerator – 1.5 GPM	- - -	$12.40
X-4200152	Flange	- - -	$25.30
X-4200155	1/2” NPT Shank Extension for Side Spray	- - -	$8.30
X-4200169	Deck Plate	- - -	$35.20
X-4200178	Hose Support	- - -	$1.70
X-4200180	Pull-Down Spray Head & Spray Head Hose – 1.8 GPM	- - -	$58.40
X-4200180-BN	Pull-Down Spray Head & Spray Head Hose – 1.8 GPM	- - -	$62.70
X-4200181	Pull-Down Spray Head – 1.8 GPM	- - -	$42.20
X-4200181-BN	Pull-Down Spray Head – 1.8 GPM	- - -	$45.40

PART #	DESCRIPTION	PCS/ CS	LIST PRICE
X-4200189	Spray-Head Flex Hose	- - -	$24.90
X-4300003	Base Plate	- - -	$2.00
X-4300004	Acrylic Handle Index Button	- - -	$2.60
X-4300005	Acrylic Handle Screw	- - -	$0.90
X-4300006	Base Plate	- - -	$2.60
X-4300008	Pop-Up Lift Rod	- - -	$14.10
X-4300010	C-Spout Escutcheon	- - -	$19.10
X-4300011	Y Connector	- - -	$17.50
X-4300015	Cross Connector	- - -	$12.50
X-4300018	Deck Plate Mounting Gasket	- - -	$1.50
X-4300022	8” Extension Base	- - -	$97.40
X-4300024	Hole Cover	- - -	$1.50
X-4300038	Mounting Deck Plate Assembly	- - -	$18.20
X-4300041	Pop-Up Lift Rod	- - -	$15.80
X-4300043	Brass Pop-Up Drain Assembly	- - -	$48.70
X-4300047	Male 15/16” Thread Aerator – 0.5 GPM	- - -	$14.60
X-4300058	Male 15/16” Thread Aerator – 1.5 GPM	- - -	$9.70
X-4300059	Male 15/16” Thread Aerator – 1.0 GPM	- - -	$10.20
X-4300061	Female 55/64” Thread Aerator – 1.0 GPM	- - -	$15.20
X-4300062	Female 55/64” Thread Aerator – 0.5 GPM	- - -	$20.10
X-4300064	Male 13/16” Thread Aerator – 1.0 GPM	- - -	$15.80
X-4300065	Male 13/16” Thread Aerator – 0.5 GPM	- - -	$22.30
X-4300087	Mounting Deck Plate Assembly	- - -	$18.10
X-4300088	Retainer Cap	- - -	$5.50
X-4300089	Retainer Nut	- - -	$3.30
X-4300090	Male 13/16” Thread Laminar Aerator – 1.5 GPM	- - -	$9.80
X-4300091	Rigid Spout Escutcheon	- - -	$12.00
X-4300093	Red/Blue Indicator	- - -	$0.90
X-4300094	Handle Escutcheon	- - -	$11.90
X-4300097	Female 55/64” Thread Aerator – 1.2 GPM	- - -	$10.90
X-4300098	Male 13/16” Thread Aerator – 1.2 GPM	- - -	$13.30
X-4300101	Quick-Connect Y Connector	- - -	$24.30
X-4300102	Quick-Connect Adaptor	- - -	$6.50
X-4400002	Tub Spout Escutcheon	50	$12.50
X-4400005	Pressure-Balance Spool	- - -	$48.40
X-4400014	Handle Escutcheon	- - -	$37.20
X-4400015	C-Spout Escutcheon	- - -	$43.60
X-4400016	C-Spout Flow Streamer	- - -	$8.10
X-4400017	Spout Hole Cover	- - -	$1.50
X-4400018	Spout Allen Screw	- - -	$0.90
X-4400024	3/32” Allen Screw	- - -	$1.50
X-4400028	5/16” Allen Screw	- - -	$1.50
X-4400030	Sleeve	- - -	$25.30
X-4400043	Faceplate	- - -	$84.10
X-4400058	5/16” Allen Wrench	- - -	$0.90
X-4400062	Faceplate Screw for Bath Drain Phillips – 6/pk	- - -	$5.30
X-4400063	Flex Connector Hose	- - -	$14.40
X-4400065	Spout Escutcheon	- - -	$28.90
X-4400070	Pressure-Balance Spool	- - -	$38.60
X-4400073	Hole Cover	- - -	$3.40
X-4400080	Locknut	- - -	$4.80
X-4400089	2” Valve Extension	- - -	$51.50
X-4400099	Allen Screw	- - -	$1.50
X-4400102	Flow Streamer	- - -	$5.30

PARTS

PART #	DESCRIPTION	PCS/ CS	LIST PRICE
X-4400105	Tub Spout Escutcheon	- - -	$24.50
X-4400106	Handheld Shower – 1.75 GPM	- - -	$83.60
X-4400108	Handle Escutcheon	- - -	$27.10
X-4400109	Rigid Spout Escutcheon	- - -	$31.90
X-4400113	Diverter Rod Flange	- - -	$12.30
X-4400114	Spout Diverter Rod Assembly	- - -	$10.60
X-4500001	Spout Sleeve Set	- - -	$13.00
X-4500002	Deck Plate	- - -	$15.80
X-4500003	Deck Plate Mounting Gasket	- - -	$2.00
X-4600001	Handheld Shower Slide Bar Brass Mount	- - -	$33.80
X-4600002	Mounting Set Screw	- - -	$1.50
X-4600003	Handheld Shower Slide Bar	- - -	$105.10
X-4600004	Handheld Shower Drop Ell	- - -	$47.80
X-4600005	Handheld Shower Vacuum Breaker	- - -	$15.40
X-4600011	Diverter Valve Flange Set	- - -	$42.50
X-4600015	Handheld Shower Drop Ell	- - -	$62.70
X-4600016	Handheld Shower Slide Bar Brass Mount	- - -	$95.50
X-4600020	Handle Adapter	- - -	$4.20
X-4600025	Rubber Gasket	- - -	$2.60
X-4600031	Drop Ell With Handheld Support	- - -	$57.70
X-4600032	Flange	- - -	$20.70
X-4600035	Diverter Valve Sleeve	- - -	$27.80
X-4600036	Handle Adapter	- - -	$1.50
X-4600045	1” Diverter Valve Extension	- - -	$21.80
X-4600048	Five-Setting Handheld Shower – 1.75 GPM	- - -	$109.30
X-4900001	Red/Blue Indicator	- - -	$1.20
X-4900002	3/32” Allen Screw	- - -	$1.50
X-4900004	Supply Nut	- - -	$3.70
X-4900005C	Acrylic Handle Cold Index	- - -	$1.50
X-4900005H	Acrylic Handle Hot Index	- - -	$1.50
X-4900006	Acrylic Handle Screw	- - -	$1.50
X-4900007	Bonnet Nut	- - -	$2.10
X-4900008	Mounting Kit	- - -	$1.50
X-4900009C	Mini Blade Handle – Cold Index	- - -	$1.50
X-4900009H	Mini Blade Handle – Hot Index	- - -	$1.50
X-4900010	ADA Wrist Blade Handle Screw	- - -	$1.50
X-4900011C	ADA Wrist Blade Handle – Cold Indicator	- - -	$1.00
X-4900011H	ADA Wrist Blade Handle – Hot Indicator	- - -	$1.00
X-4900012	Tubular Spout O-Ring	- - -	$1.50
X-4900013	Tubular Spout Snap Ring	- - -	$1.50
X-4900014C	Lever Handle – Cold Index	- - -	$2.70
X-4900014H	Lever Handle – Hot Index	- - -	$2.70
X-4900015	Handle Screw	- - -	$1.50
X-4900017	Retainer Cap	- - -	$13.00
X-4900018	Retainer Nut	- - -	$5.10
X-4900019	Springs & Seats	- - -	$1.50
X-4900020	Y Connector	- - -	$23.20
X-4900022	Bonnet Nut	- - -	$5.00
X-4900023	Handle Escutcheon	- - -	$18.90
X-4900024	3/32” Allen Wrench	- - -	$1.50
X-4900026	1/8” Allen Wrench	- - -	$1.00
X-4900029	Cross Handle Screw	- - -	$1.50
X-4900030	Eccentric Elbow Washer	- - -	$2.10
X-4900032	Spout Escutcheon	- - -	$13.00
X-4900034	Handle Escutcheon	- - -	$17.10

PART #	DESCRIPTION	PCS/ CS	LIST PRICE
X-4900035	Handle Screw	- - -	$1.50
X-4900036	Handle Screw	- - -	$1.50
X-4900037	Bonnet Nut	- - -	$2.30
X-4900038	Bonnet Nut Gasket	- - -	$1.50
X-4900041	Male 13/16” Thread Aerator – 2.0 GPM	- - -	$5.60
X-4900042C	Handle Button – Cold	- - -	$2.90
X-4900042H	Handle Button – Hot	- - -	$2.90
X-4900044	Hole Cover	- - -	$2.40
X-4900047	Handheld Shower Hose Rubber Washer	- - -	$1.50
X-4900049	Handheld Showerhead	- - -	$72.00
X-4900066	Mini Blade Handle Screw	- - -	$1.50
X-4900072	Male 13/16” Thread Aerator – 1.0 GPM	- - -	$8.80
X-4900073	Male 13/16” Thread Aerator – 0.5 GPM	- - -	$16.30
X-4900080	3/32” Allen Screw	- - -	$1.50
X-4900081	Male 15/16” Thread Aerator – 1.5 GPM	- - -	$10.80
X-4900082	Male 15/16” Thread Aerator – 1.0 GPM	- - -	$10.70
X-4900083	Male 15/16” Thread Aerator – 0.5 GPM	- - -	$15.00
X-4900084	Female 55/64” Thread Aerator – 1.5 GPM	- - -	$10.70
X-4900085	Female 55/64” Thread Aerator – 1.0 GPM	- - -	$11.60
X-4900086	Female 55/64” Thread Aerator – 0.5 GPM	- - -	$15.90
X-4900089	Male 13/16” Thread Aerator – 1.5 GPM	- - -	$8.10
X-4900090	Handheld Showerhead – 1.5 GPM	- - -	$96.20
X-4900091	Female 55/64” Thread Aerator – 1.5 GPM	- - -	$15.70
X-4900092	Female 55/64” Thread Aerator – 1.0 GPM	- - -	$11.30
X-4900093	Female 55/64” Thread Aerator – 0.5 GPM	- - -	$20.00
X-4900096	Female 55/64” Thread Aerator – 1.0 GPM	- - -	$10.50
X-4900097	Female 55/64” Thread Aerator – 0.5 GPM	- - -	$18.50
X-4900105	1/2” NPT Shank Extension	- - -	$9.00
X-4900112	Handheld Showerhead – 1.75 GPM	- - -	$98.70
X-4900116	Bonnet Nut Gasket	- - -	$1.70
X-4900117	Replacement Parts Kit	- - -	$423.20
X-4900122	Female 55/64” Thread Aerator – 1.2 GPM	- - -	$14.10
X-4900124	Female 55/64” Thread Aerator – 1.2 GPM	- - -	$13.90
X-4900125	1” Extension Kit	- - -	$45.50
X-4900125-BN	1” Extension Kit	- - -	$55.60
X-5200003	Spout Mounting Kit	- - -	$3.80
X-5200008	Mounting Tool	- - -	$6.50
X-5200009	Valve Mounting Kit	- - -	$3.20
X-5200015	Mounting Kit	- - -	$8.40
X-5200019	Mounting Kit	- - -	$5.70
X-5300001	Mounting Kit	- - -	$3.20
X-5300003	J-Spout Mounting Kit	- - -	$3.50
X-5300005	Spout Locknut Set	- - -	$2.70
X-5300007	Mounting Kit	- - -	$8.10
X-5300008	Mounting Kit	- - -	$18.70
X-5300012	Mounting Kit	- - -	$8.70
X-5400003	Valve Mounting Kit	- - -	$19.10
X-5400008	IPS to CXC Adapter for X-6400051	- - -	$4.20
X-5400009	IPS to CXC Adapter for X-6400024	- - -	$6.30
X-5400010	Mounting Tool for X-5400008/X-5400009	- - -	$6.70
X-5600001	Mounting Bracket	- - -	$1.50
X-5600004	Handheld Mounting Kit	- - -	$4.40
X-5900001	Valve Mounting Kit	- - -	$8.20
X-6300001	Brass Pop-Up Drain Assembly	- - -	$42.90
X-6300002	Brass Grid Strainer	- - -	$54.70

PARTS

PART #	DESCRIPTION	PCS/ CS	LIST PRICE
X-6300003	Brass Pop-Up Drain Assembly	- - -	$38.60
X-6300005	Brass Pop-Up Drain Assembly	- - -	$52.60
X-6300006	Brass Pop-Up Drain Assembly	- - -	$41.90
X-6300008	Brass Pop-Up Drain Assembly	- - -	$44.00
X-6300010	Push-Down Drain Without Overflow	25	$69.70
X-6300011	Push-Down Drain With Overflow	25	$73.70
X-6300012	Brass Pop-Up Drain Assembly	- - -	$44.00
X-6300020	Brass Pop-Up Drain Assembly	- - -	$57.90
X-6300029	Brass Pop-Up Drain Assembly	- - -	$49.10
X-6300030	Brass Pop-Up Drain Assembly	- - -	$50.70
X-6400002	Shower Arm	- - -	$14.20
X-6400003	Shower Arm Flange	- - -	$11.80
X-6400004	Single-Function Showerhead	21	$131.80
X-6400005	Shower Arm	- - -	$60.00
X-6400006	Shower Arm Flange	- - -	$23.00
X-6400007	Faceplate	- - -	$50.40
X-6400008	Combo 1/2" IPS/Slip-On Diverter Tub Spout	- - -	$42.90
X-6400011	Shower Arm Flange	- - -	$16.30
X-6400012	Single-Function Rain Showerhead	6	$71.70
X-6400013	14" L-Shape Shower Arm and Shower Arm Flange	6	$67.20
X-6400015	Shower Arm Flange	- - -	$5.20
X-6400021	Combo 1/2" IPS/Slip-On Diverter Tub Spout	- - -	$41.80
X-6400022	Combo 1/2" IPS/Slip-On Tub Spout	- - -	$30.80
X-6400024	Tub Spout	- - -	$102.90
X-6400029	Bath Waste & Overflow – Tip-Toe Bath Strainer; 1-1/2" Coarse Thread	100	$26.70
X-6400029-BN	Bath Waste & Overflow – Tip-Toe Bath Strainer; 1-1/2" Coarse Thread	100	$27.80
X-6400030	Bath Waste & Overflow – Lift & Lock Strainer; 1-1/2" Coarse Thread	100	$21.80
X-6400030-BN	Bath Waste & Overflow – Lift & Lock Strainer; 1-1/2" Coarse Thread	100	$23.20
X-6400030-ORB	Bath Waste & Overflow – Lift & Lock Strainer; 1-1/2" Coarse Thread	100	$25.70
X-6400031	Bath Waste & Overflow – Trip-Lever Faceplate With Screws	100	$17.40
X-6400031-BN	Bath Waste & Overflow – Trip-Lever Faceplate With Screws	100	$18.40
X-6400031-ORB	Bath Waste & Overflow – Trip-Lever Faceplate With Screws	100	$21.20
X-6400032	Bath Waste & Overflow – 2-Hole Faceplate With Screws	200	$12.40
X-6400032-ORB	Bath Waste & Overflow – 2-Hole Faceplate With Screws	200	$15.30
X-6400033	Bath Waste & Overflow – 1-Hole Faceplate With Screw	200	$11.50
X-6400033-BN	Bath Waste & Overflow – 1-Hole Faceplate With Screw	200	$12.40
X-6400033-ORB	Bath Waste & Overflow – 1-Hole Faceplate With Screw	200	$13.60
X-6400034	Bath Waste & Overflow – Grid Strainer With Screw	200	$9.80
X-6400034-BN	Bath Waste & Overflow – Grid Strainer With Screw	200	$10.70
X-6400034-ORB	Bath Waste & Overflow – Grid Strainer With Screw	200	$11.70

PART #	DESCRIPTION	PCS/ CS	LIST PRICE
X-6400038	Single-Function Rain Showerhead With Shower Arm and Flange	6	$274.00
X-6400045	Four-Function Showerhead – 1.5 GPM	65	$47.60
X-6400045-BN	Four-Function Showerhead – 1.5 GPM	65	$49.30
X-6400051	Diverter Tub Spout	- - -	$218.50
X-6400052	Single-Function Standard Showerhead – 1.5 GPM	30	$35.20
X-6400052-BN	Single-Function Standard Showerhead – 1.5 GPM	30	$41.90
X-6400055	Single-Function Rain Showerhead – 1.5 GPM	18	$59.00
X-6400055-BN	Single-Function Rain Showerhead – 1.5 GPM	18	$63.40
X-6400057	Single-Function Showerhead – 1.5 GPM	- - -	$140.10
X-6400058	Faceplate	- - -	$48.30
X-6400059	Faceplate	- - -	$42.90
X-6400064	Faceplate	- - -	$41.90
X-6400078	Single-Function 6" Square Rain Showerhead	18	$45.10
X-6400079	Four-Function Showerhead	- - -	$37.50
X-6400081	Single-Function Standard Showerhead	- - -	$27.30
X-6400081-BN	Single-Function Standard Showerhead	- - -	$41.90
X-6400085	12" Ceiling-Mount Shower Arm and Shower-Arm Flange	- - -	$72.90
X-6400085-BN	12" Ceiling-Mount Shower Arm and Shower-Arm Flange	- - -	$83.60
X-6400085-MB	12" Ceiling-Mount Shower Arm and Shower-Arm Flange	- - -	$83.60
X-6400086	Combo 1/2" IPS/Slip-On Diverter Tub Spout	- - -	$83.50
X-6400088	Single-Function 6" Square Rain Showerhead	- - -	$42.70
X-6400095	Five-Function Showerhead	- - -	$64.90
X-6400097	Single-Function Showerhead	- - -	$133.60
X-6400102	Extended Motegi Combo Diverter Tub Spout	25	$39.60
X-6400103	Square Shower Arm Flange	- - -	$12.40
X-6400104	8-7/8" L-Shape Shower Arm	- - -	$32.20
X-6600001	Diverter Valve Faceplate	- - -	$28.40

TERMS & CONDITIONS

PAYMENT TERMS

Net 30 days for all accounts in good standing. 1.5% per month interest on all past due balances. Should any invoice be held in question, the balance not in question must be paid within the previously mentioned terms.

ORDERS

Minimum orders $100 net.

BACKORDERS

Backorders will be shipped unless otherwise notified by customer.

SALES TAX

All merchandise is sold to customers for resale. Customers assume full responsibility for all taxes or other assessments imposed by any government agency. All customers must furnish Pioneer a valid resale or tax exemption number.

RETURNS

Product MAY NOT be returned without prior inspection and written authorization from a Pioneer Industries Inc. sales representative. An approved Returned Goods Authorization must accompany all returns. A handling charge of 50% will be assessed against any returned product without prior authorization. Credits will be issued based on the established purchase price less any applicable transportation, handling and restocking charges. Returns of discontinued products or products in non-resalable condition are not accepted and will be issued credit at scrap value only. Credits must be taken within six months of date of issue.

CLAIMS

All claims for shortages must be made within 3 days of receipt of shipment. Pioneer shall be held blameless in any claim of injury during installation of Pioneer merchandise.

PRICES

Prices are subject to change without notice.

MODELS

Pioneer may, at its discretion, discontinue, modify or change any product listed in its catalog without prior notice.

FREIGHT

All goods are sold F.O.B. Commerce, California, or F.O.B. Antioch, Tennessee. Freight will be prepaid on orders of $1,000 net or more to all 48 contiguous states. Prepaid orders from customers not within 48 contiguous states will be shipped prepaid to any port or border destination within the 48 contiguous states. We reserve the right to ship via the most cost-effective route.

SALES POLICY

Possession of this catalog does not constitute an offer to sell.

DISCLAIMER

Any and all references to trade names and/or trademarks in this catalog shall not be construed to be an endorsement by such manufacturer.

RESIDENTIAL

OLYMPIA

i1

SINGLE HANDLE BATHROOM FAUCETS

	MODEL#	FINISH	DESCRIPTION	CASE	PRICE
	L-6030	Chrome	• Single-Handle Bathroom Faucet • Lever Handle • 4-5/8" Reach, 3-1/8" From Deck to Aerator • Ceramic Disc Cartridge • 1-Hole Installation • 50/50 Pop-Up Drain Assembly • Easy-Install 18" Flex Supply Lines With 3/8" Connections • With 1.2 GPM Flow Rate	12	$152.30
	L-6030-BN	PVD Brushed Nickel		12	$192.00
	L-6030-MB	Matte Black		12	$239.70
	L-6030B	Chrome	• Builder Tract Pack	12	$152.40
	L-6030-WD	Chrome	• 1- or 3-Hole 4" Installation • Deck Cover Plate Included	12	$162.90
	L-6030-WD-BN	PVD Brushed Nickel		12	$216.70
	L-6030-WD-MB NEW	Matte Black		12	$227.54
	L-6031	Chrome	• Single-Handle Bathroom Faucet • Lever Handle • 4-5/8" Reach, 3-1/8" From Deck to Aerator • Ceramic Disc Cartridge • 1-Hole Installation • With Pop-Up Hole Cover • Easy-Install 18" Flex Supply Lines With 3/8" Connections • With 1.2 GPM Flow Rate	12	$141.60
	L-6031-BN	PVD Brushed Nickel		12	$180.30
	L-6031-WD	Chrome	• 1- or 3-Hole 4" Installation • Deck Cover Plate Included	12	$150.40
	L-6031-WD-BN	PVD Brushed Nickel		12	$201.00
	L-6032	Chrome	• Single-Handle Bathroom Faucet • Lever Handle • 4-5/8" Reach, 3-1/8" From Deck to Aerator • Ceramic Disc Cartridge • 1-Hole Installation • Brass Pop-Up Drain Assembly • Easy-Install 18" Flex Supply Lines With 3/8" Connections • With 1.2 GPM Flow Rate	12	$160.60
	L-6032-BN	PVD Brushed Nickel		12	$210.80
	L-6032-MB	Matte Black		12	$252.90
	L-6032B	Chrome	• Builder Tract Pack	12	$157.60
	L-6032-WD	Chrome	• 1- or 3-Hole 4" Installation • Deck Cover Plate Included	12	$168.10
	L-6032-WD-BN	PVD Brushed Nickel		12	$227.10
	L-6033	Chrome	• Push-Down Drain With Overflow	12	$165.10

PRESSURE BALANCE TRIM SETS

	MODEL#	FINISH	DESCRIPTION	CASE	PRICE
	T-2330	Chrome	• Single-Handle Tub & Shower Trim Set • Lever Handle • Ceramic Disc Cartridge With Temperature Limit Cap • Single-Function 3-3/4" Showerhead, Arm & Flange • Combo 1/2" IPS/Slip-On Diverter Tub Spout With Escutcheon • With 1.75 GPM Flow Rate • For Use With V-2300B or V-2400B Series Valves – Valves Not Included	12	$107.90
	T-2330-BN	PVD Brushed Nickel		12	$140.00
	T-2330-MB NEW	Matte Black		12	$147.00
	T-2331	Chrome	• Single-Handle Tub Trim Set • Lever Handle • Ceramic Disc Cartridge With Temperature Limit Cap • Combo 1/2" IPS/Slip-On Tub Spout With Escutcheon • For Use With V-2300B or V-2400B Series Valves – Valves Not Included	12	$68.20
	T-2331-BN	PVD Brushed Nickel		12	$89.60
	T-2332	Chrome	• Single-Handle Shower Trim Set • Lever Handle • Ceramic Disc Cartridge With Temperature Limit Cap • Single-Function 3-3/4" Showerhead, Arm & Flange • With 1.75 GPM Flow Rate • For Use With V-2300B or V-2400B Series Valves – Valves Not Included	12	$83.10
	T-2332-BN	PVD Brushed Nickel		12	$107.20
	T-2332-MB NEW	Matte Black		12	$112.56
	T-2333	Chrome	• Single-Handle Valve Trim Set • Lever Handle • Ceramic Disc Cartridge With Temperature Limit Cap • For Use With V-2300B or V-2400B Series Valves – Valves Not Included	12	$63.50
	T-2333-BN	PVD Brushed Nickel		12	$64.70

i1

PRESSURE BALANCE TRIM SETS

	MODEL#	FINISH	DESCRIPTION	CASE	PRICE
	T-2334	Chrome	• Single-Handle Tub & Shower Trim Set • Lever Handle • Ceramic Disc Cartridge With Temperature Limit Cap • Single-Function Rain Showerhead, Arm & Flange • Extended Combo 1/2" IPS/Slip-On Diverter Tub Spout With Escutcheon • With 1.75 GPM Flow Rate • For Use With V-2300B or V-2400B Series Valves – Valves Not Included	12	$138.50
	T-2334-BN	PVD Brushed Nickel		12	$171.80
	T-2334-7S NEW	Chrome	• Single-Handle Tub & Shower Trim Set • Lever Handle – Faceplate • Ceramic Disc Cartridge With Temperature Limit Cap • Single-Function Rain Showerhead, Arm & Flange • Extended 7" Front Lift Combo 1/2" IPS/Slip-On Diverter Tub Spout With Escutcheon • With 1.75 GPM Flow Rate • For Use With V-2300B or V-2400B Series Valves – Valves Not Included	12	$143.00
	T-2334-7S-BN NEW	PVD Brushed Nickel		12	$176.00
	T-2334-7S-MB NEW	Matte Black		12	$208.00
	T-2335	Chrome	• Single-Handle Shower Trim Set • Lever Handle • Ceramic Disc Cartridge With Temperature Limit Cap • Single-Function Rain Showerhead, Arm & Flange • With 1.75 GPM Flow Rate • For Use With V-2300B or V-2400B Series Valves – Valves Not Included	12	$107.60
	T-2335-BN	PVD Brushed Nickel		12	$130.80
	P-2230T	Chrome	• Single-Handle Diverter Trim Set • Lever Handle • Diverter Valve Faceplate • Diverter Valve Sleeve • For Use With 4100B Valve – Valve Not Included	12	$86.00

SINGLE-HANDLE PULL-DOWN KITCHEN FAUCETS

	MODEL#	FINISH	DESCRIPTION	CASE	PRICE
	K-5020	Chrome	• Single-Handle Pull-Down Kitchen Faucet • Lever Handle • Pull-Down Head with 2 Spray Patterns, Swivel 360 Degree • 7-5/8" Reach, 8-5/8" From Deck to Aerator • Ceramic Disc Cartridge • 1- or 3-Hole 8" Installation, Deck Cover Plate Included • Ball-Joint Swivel Spray Head • Easy-Install 30" Flex Supply Lines With 3/8" Connections • With 1.5 GPM Flow Rate	6	$241.10
	K-5020-BN	PVD Brushed Nickel		6	$282.70
	K-5020-MB	Matte Black		6	$270.60
	K-5020-ST NEW	Spot Resist Stainless Steel		6	$282.70
	K-5020-TL NEW	Chrome	• Single-Handle Touchless Sensor Pull-Down Kitchen Faucet • Lever Handle • Touchless Wave Sense On/Off • Rechargeable USB Cable Included • Pull-Down Head with 2 Spray Patterns, Swivel 360 Degree With Quick-Connect Spray Head Hose • 7-5/8" Reach, 8-5/8" From Deck to Aerator • Ceramic Disc Cartridge	6	$344.00
	K-5020-TL-BN NEW	PVD Brushed Nickel		6	$382.00
	K-5020-TL-MB NEW	Matte Black		6	$404.00
	K-5025	Chrome	• Single-Handle Pull-Down Kitchen Faucet • Lever Handle • Pull-Down Head with 2 Spray Patterns, Swivel 360 Degree With Quick-Connect Spray Head Hose • 7-5/8" Reach, 8-3/4" From Deck to Aerator • Ceramic Disc Cartridge • 1- or 3-Hole 8" Installation, Deck Cover Plate Included • Ball-Joint Swivel Spray Head • Easy-Install 30" Flex Supply Lines With 3/8" Connections • With 1.5 GPM Flow Rate	6	$254.90
	K-5025-BN	PVD Brushed Nickel		6	$310.10
	K-5025-MB	Matte Black		6	$314.20

TOUCHLESS PULL-DOWN SPRAY HEAD

	MODEL#	FINISH	DESCRIPTION	CASE	PRICE
	OP-420092 NEW	Chrome	• Touchless Pull-Down Spray Head • Max 3" Distance to Activate Sensor • 3 Minutes Auto Shut Off • Rechargeable USB Cable Included • 1/2" Female IPS Connection	- - -	$117.00
	OP-420092-BN NEW	PVD Brushed Nickel		- - -	$124.00
	OP-420092-MB NEW	Matte Black		- - -	$124.00

i2

SINGLE-HANDLE PRE-RINSE SPRING PULL-DOWN KITCHEN FAUCETS

	MODEL#	FINISH	DESCRIPTION	CASE	PRICE
	K-5010	Chrome	• Single-Handle Pre-Rinse Spring Pull-Down Kitchen Faucet • Lever Handle • Pull-Down Head with 2 Spray Patterns, Swivel 360 Degree With Quick-Connect Spray Head Hose • 7-5/8" Reach, 7-1/4" From Deck to Aerator, 21-1/4" Overall Height • Ceramic Disc Cartridge • 1- or 3-Hole 8" Installation, Deck Cover Plate Included • Spring-Style Spout Swivels 360 Degree • Easy-Install 30" Flex Supply Lines With 3/8" Connections • With 1.5 GPM Flow Rate	6	$272.00
	K-5010-BN	PVD Brushed Nickel		6	$312.70
	K-5010-MB	Matte Black		6	$321.90
	K-5015	Chrome	• Single-Handle Pre-Rinse Spring Pull-Down Kitchen Faucet • Lever Handle • Pull-Down Head with 2 Spray Patterns, Swivel 360 Degree With Quick-Connect Spray Head Hose • 7-5/8" Reach, 7" From Deck to Aerator, 21-5/16" Overall Height • Ceramic Disc Cartridge • 1- or 3-Hole 8" Installation, Deck Cover Plate Included • Spring-Style Spout Swivels 360 Degree • Easy-Install 30" Flex Supply Lines With 3/8" Connections • With 1.5 GPM Flow Rate	6	$279.60
	K-5015-BN	PVD Brushed Nickel		6	$340.80
	K-5015-MB NEW	Matte Black		6	$357.84

SINGLE HANDLE BATHROOM FAUCETS

	MODEL#	FINISH	DESCRIPTION	CASE	PRICE
	L-6050	Chrome	• Single-Handle Bathroom Faucet • Lever Handle • 4-3/4" Reach, 2-1/2" From Deck to Aerator • Ceramic Disc Cartridge • 1-Hole Installation • 50/50 Pop-Up Drain Assembly • Easy-Install 18" Flex Supply Lines With 3/8" Connections • With 1.2 GPM Flow Rate	12	$151.50
	L-6050-BN	PVD Brushed Nickel		12	$203.90
	L-6050-MB	Matte Black		12	$217.50
	L-6050B	Chrome	• Builder Tract Pack	12	$150.90
	L-6050B-BN	PVD Brushed Nickel		12	$201.90
	L-6050-WD	Chrome	• 1- or 3-Hole 4" Installation • Deck Cover Plate Included	12	$164.60
	L-6050-WD-BN	PVD Brushed Nickel		12	$218.80
	L-6050-WD-MB NEW	Matte Black		12	$229.74
	L-6051	Chrome	• Single-Handle Bathroom Faucet • Lever Handle • 4-3/4" Reach, 2-1/2" From Deck to Aerator • Ceramic Disc Cartridge • 1-Hole Installation • With Pop-Up Hole Cover • Easy-Install 18" Flex Supply Lines With 3/8" Connections • With 1.2 GPM Flow Rate	12	$141.50
	L-6051-BN	PVD Brushed Nickel		12	$193.50
	L-6051-WD	Chrome	• 1- or 3-Hole 4" Installation • Deck Cover Plate Included	12	$151.90
	L-6051-WD-BN	PVD Brushed Nickel		12	$209.10
	L-6051G	Chrome	• Single-Handle Bathroom Faucet • Lever Handle • 4-3/4" Reach, 2-1/2" From Deck to Aerator • Ceramic Disc Cartridge • 1-Hole Installation • With Pop-Up Hole Cover, Brass Grid Strainer Drain Assembly • Easy-Install 18" Flex Supply Lines With 3/8" Connections • With 1.2 GPM Flow Rate	12	$161.90
	L-6051G-BN	PVD Brushed Nickel		12	$210.30
	L-6051G-WD	Chrome	• 1- or 3-Hole 4" Installation • Deck Cover Plate Included	12	$167.20
	L-6051G-WD-BN	PVD Brushed Nickel		12	$222.30

i2

SINGLE HANDLE BATHROOM FAUCETS

	MODEL#	FINISH	DESCRIPTION	CASE	PRICE
	L-6052	Chrome	• Single-Handle Bathroom Faucet • Lever Handle • 4-3/4" Reach, 2-1/2" From Deck to Aerator • Ceramic Disc Cartridge • 1-Hole Installation • Brass Pop-Up Drain Assembly • Easy-Install 18" Flex Supply Lines With 3/8" Connections • With 1.2 GPM Flow Rate	12	$161.40
	L-6052-BN	PVD Brushed Nickel		12	$212.90
	L-6052-MB	Matte Black		12	$220.60
	L-6052B	Chrome	• Builder Tract Pack	12	$157.70
	L-6052B-BN	PVD Brushed Nickel		12	$210.80
	L-6052-WD	Chrome	• 1- or 3-Hole 4" Installation • Deck Cover Plate Included	12	$168.20
	L-6052-WD-BN	PVD Brushed Nickel		12	$222.60
	L-6052-WD-MB	Matte Black		12	$213.00
	L-6053	Chrome	• Single-Handle Bathroom Faucet • Lever Handle • 4-3/4" Reach, 2-1/2" From Deck to Aerator • Ceramic Disc Cartridge • 1-Hole Installation • Push-Down Drain With Overflow • Easy-Install 18" Flex Supply Lines With 3/8" Connections • With 1.2 GPM Flow Rate	12	$161.30
	L-6053-BN	PVD Brushed Nickel		12	$173.20
	L-6055	Chrome	• Single-Handle Bathroom Faucet • Lever Handle • 4-3/4" Reach, 2-1/2" From Deck to Aerator • Ceramic Disc Cartridge • 1-Hole Installation • 50/50 Push-Down Drain With Overflow • Easy-Install 18" Flex Supply Lines With 3/8" Connections • With 1.2 GPM Flow Rate	12	$156.10
	L-6055-BN	PVD Brushed Nickel		12	$206.10

A

PRESSURE BALANCE TRIM SETS

	MODEL#	FINISH	DESCRIPTION	CASE	PRICE
	T-2370	Chrome	• Single-Handle Tub & Shower Trim Set • Lever Handle • Ceramic Disc Cartridge With Temperature Limit Cap • Single-Function 3-3/4" Showerhead, Arm & Flange • Combo 1/2" IPS/Slip-On Diverter Tub Spout With Escutcheon • With 1.75 GPM Flow Rate • For Use With V-2300B or V-2400B Series Valves – Valves Not Included	12	$118.10
	T-2370-BN	PVD Brushed Nickel		12	$152.20
	T-2370-MB	Matte Black		12	$153.70
	TD-2370-ADA	Chrome	• Single-Handle Tub & Shower Trim Set With Handheld • Lever Handle – Faceplate • Single-Function 3-3/4" Showerhead – 1.75 GPM Flow Rate, Arm & Flange • Combo 1/2" IPS/Slip-On Diverter Tub Spout With Escutcheon • For Use With V-2500B Valve – Valve Not Included • Three-Function Handheld Showerhead With Non-Positive/Shut Off – 1.75 GPM With 60" Stainless-Steel Flex Hose • 24" Grab/Slide Bar and Brass Drop Ell With Vacuum Breaker	6	$246.90
	TD-2370-ADA-BN	PVD Brushed Nickel		6	$365.20
	TD-2370-ADA-MB	Matte Black		6	$383.60
	T-2371	Chrome	• Single-Handle Tub Trim Set • Lever Handle • Ceramic Disc Cartridge With Temperature Limit Cap • Combo 1/2" IPS/Slip-On Tub Spout With Escutcheon • For Use With V-2300B or V-2400B Series Valves – Valves Not Included	12	$82.90
	T-2371-BN	PVD Brushed Nickel		12	$106.00
	T-2372	Chrome	• Single-Handle Shower Trim Set • Lever Handle • Ceramic Disc Cartridge With Temperature Limit Cap • Single-Function 3-3/4" Showerhead, Arm & Flange • With 1.75 GPM Flow Rate • For Use With V-2300B or V-2400B Series Valves – Valves Not Included	12	$95.40
	T-2372-BN	PVD Brushed Nickel		12	$118.90
	T-2372-MB	Matte Black		12	$118.30
	T-2372-4S	Chrome	• Single-Handle Shower Trim Set • Lever Handle • Ceramic Disc Cartridge With Temperature Limit Cap • Single-Function 4" Square Showerhead, Arm & Flange • With 1.75 GPM Flow Rate • For Use With V-2300B or V-2400B Series Valves – Valves Not Included	12	$96.10

i2

PRESSURE BALANCE TRIM SETS

	MODEL#	FINISH	DESCRIPTION	CASE	PRICE
	TD-2372-ADA	Chrome	• Single-Handle Shower Trim Set With Handheld • Lever Handle – Faceplate • Single-Function 3-3/4" Showerhead – 1.75 GPM Flow Rate, Arm & Flange • For Use With V-2500B Valve – Valve Not Included • Three-Function Handheld Showerhead With Non-Positive/Shut Off – 1.75 GPM With 60" Stainless-Steel Flex Hose • 24" Grab/Slide Bar and Brass Drop Ell With Vacuum Breaker	6	$228.70
	TD-2372-ADA-BN	PVD Brushed Nickel		6	$337.90
	TD-2372-ADA-MB	Matte Black		6	$354.40
	T-2373	Chrome	• Single-Handle Valve Trim Set • Lever Handle • Ceramic Disc Cartridge With Temperature Limit Cap • For Use With V-2300B or V-2400B Series Valves – Valves Not Included	12	$64.90
	T-2373-BN	PVD Brushed Nickel		12	$82.60
	T-2374	Chrome	• Single-Handle Tub & Shower Trim Set • Lever Handle • Ceramic Disc Cartridge With Temperature Limit Cap • Single-Function Rain Showerhead, Arm & Flange • Extended Combo 1/2" IPS/Slip-On Diverter Tub Spout With Escutcheon • With 1.75 GPM Flow Rate • For Use With V-2300B or V-2400B Series Valves – Valves Not Included	12	$152.70
	T-2374-BN	PVD Brushed Nickel		12	$200.00
	T-2374-MB	Matte Black		12	$195.50
	T-2374-6S	Chrome	• Single-Handle Tub & Shower Trim Set • Lever Handle • Ceramic Disc Cartridge With Temperature Limit Cap • Single-Function 6" Square Showerhead, Arm & Flange • Extended Combo 1/2" IPS/Slip-On Diverter Tub Spout With Escutcheon • With 1.75 GPM Flow Rate • For Use With V-2300B or V-2400B Series Valves – Valves Not Included	12	$166.40

i2

PRESSURE BALANCE TRIM SETS

	MODEL#	FINISH	DESCRIPTION	CASE	PRICE
	T-2374-7S NEW	Chrome	• Single-Handle Tub & Shower Trim Set • Lever Handle – Faceplate • Ceramic Disc Cartridge With Temperature Limit Cap • Single-Function Rain Showerhead, Arm & Flange • Extended 7" Front Lift Combo 1/2" IPS/Slip-On Diverter Tub Spout With Escutcheon • With 1.75 GPM Flow Rate • For Use With V-2300B Or V-2400B Series Valves – Valves Not Included	12	$158.00
	T-2374-7S-BN NEW	PVD Brushed Nickel		12	$204.00
	T-2374-7S-MB NEW	Matte Black		12	$208.00
	T-2375	Chrome	• Single-Handle Shower Trim Set • Lever Handle • Ceramic Disc Cartridge With Temperature Limit Cap • Single-Function Rain Showerhead, Arm & Flange • With 1.75 GPM Flow Rate • For Use With V-2300B or V-2400B Series Valves – Valves Not Included	12	$115.50
	T-2375-BN	PVD Brushed Nickel		12	$145.50
	T-2375-MB	Matte Black		12	$150.00
	P-2270T	Chrome	• Single-Handle Diverter Trim Set • Lever Handle • Diverter Valve Faceplate • Diverter Valve Sleeve • For Use With 4100B Valve – Valve Not Included	12	$85.20
	P-2270T-BN	PVD Brushed Nickel		12	$94.20
	P-2270T-MB	Matte Black		12	$81.50

SHOWER COLUMNS

	MODEL#	FINISH	DESCRIPTION	CASE	PRICE
	P-4550	Chrome	• Shower Column • Exposed Shower Riser With Diverter and Handheld Shower Set • 39" High Exposed Shower Riser • Single Function 6" Rain Showerhead • Three-Function Handheld Showerhead With Non-Positive/Shut Off • 60" Stainless-Steel Flex Hose • With 1.75 GPM Flow Rate • Two-Way Diverter Ceramic Cartridge	6	$367.80
	P-4550-BN	PVD Brushed Nickel		6	$469.90
	P-4550-MB	Matte Black		6	$482.30

i2

HANDHELD SHOWER SETS

		MODEL#	FINISH	DESCRIPTION	CASE	PRICE
		P-4530	Chrome	• Handheld Shower Set • Three-Function Handheld Showerhead With Non-Positive/Shut Off • 24" Slide Bar With Mounts • 60" Stainless-Steel Flex Hose • Brass Drop Ell With Vacuum Breaker • With 1.75 GPM Flow Rate • Valve Sold Separately	6	$150.60
		P-4530-BN	PVD Brushed Nickel		6	$260.60
		P-4530-MB	Matte Black		6	$260.60

i2v

SINGLE HANDLE BATHROOM FAUCETS

	MODEL#	FINISH	DESCRIPTION	CASE	PRICE
	L-6020	Chrome	• Single-Handle Bathroom Faucet • Lever Handle • 3-5/8" Reach, 3" From Deck to Aerator • Ceramic Disc Cartridge • 1-Hole Installation • 50/50 Pop-Up Drain Assembly • Easy-Install 18" Flex Supply Lines With 3/8" Connections • With 1.2 GPM Flow Rate	12	$161.30
	L-6020-BN	PVD Brushed Nickel		12	$213.60
	L-6020-MB	Matte Black		12	$238.20
	L-6020B	Chrome	• Builder Tract Pack	12	$159.30
	L-6020-WD	Chrome	• 1- or 3-Hole 4" Installation • Deck Cover Plate Included	12	$173.00
	L-6020-WD-BN	PVD Brushed Nickel		12	$230.10
	L-6021	Chrome	• Single-Handle Bathroom Faucet • Lever Handle • 3-5/8" Reach, 3" From Deck to Aerator • Ceramic Disc Cartridge • 1-Hole Installation • With Pop-Up Hole Cover • Easy-Install 18" Flex Supply Lines With 3/8" Connections • With 1.2 GPM Flow Rate	12	$142.60
	L-6021-BN	PVD Brushed Nickel		12	$189.70
	L-6021-WD	Chrome	• 1- or 3-Hole 4" Installation • Deck Cover Plate Included	12	$150.90
	L-6021-WD-BN	PVD Brushed Nickel		12	$200.80
	L-6022	Chrome	• Single-Handle Bathroom Faucet • Lever Handle • 3-5/8" Reach, 3" From Deck to Aerator • Ceramic Disc Cartridge • 1-Hole Installation • Brass Pop-Up Drain Assembly • Easy-Install 18" Flex Supply Lines With 3/8" Connections • With 1.2 GPM Flow Rate	12	$166.50
	L-6022-BN	PVD Brushed Nickel		12	$223.70
	L-6022-MB NEW	Matte Black		12	$234.89
	L-6022B	Chrome	• Builder Tract Pack	12	$166.10
	L-6022-WD	Chrome	• 1- or 3-Hole 4" Installation • Deck Cover Plate Included	12	$174.90
	L-6022-WD-BN	PVD Brushed Nickel		12	$232.60
	L-6023	Chrome	• Single-Handle Bathroom Faucet • Lever Handle • 3-5/8" Reach, 3" From Deck to Aerator • Ceramic Disc Cartridge • 1-Hole Installation • Push-Down Drain With Overflow • Easy-Install 18" Flex Supply Lines With 3/8" Connections • With 1.2 GPM Flow Rate	12	$171.70
	L-6025	Chrome	• Single-Handle Bathroom Faucet • Lever Handle • 3-5/8" Reach, 3" From Deck to Aerator • Ceramic Disc Cartridge • 1-Hole Installation • 50/50 Push-Down Drain With Overflow • Easy-Install 18" Flex Supply Lines With 3/8" Connections • With 1.2 GPM Flow Rate	12	$147.10

i2v

TWO HANDLE BATHROOM FAUCETS

	MODEL#	FINISH	DESCRIPTION	CASE	PRICE
	L-7420	Chrome	• Two-Handle Bathroom Widespread Faucet • Lever Handles • Rigid Gooseneck Spout • 4" Reach, 5" From Deck to Aerator • Ceramic Disc Cartridges • 3-Hole 4" to 16" Installation • 50/50 Pop-Up Drain Assembly • With 1.2 GPM Flow Rate • Easy-Install Mounting Nut	6	$231.80
	L-7420-BN	PVD Brushed Nickel		6	$263.60
	L-7422	Chrome	• Two-Handle Bathroom Widespread Faucet • Lever Handles • Rigid Gooseneck Spout • 4" Reach, 5" From Deck to Aerator • Ceramic Disc Cartridges • 3-Hole 4" to 16" Installation • Brass Pop-Up Drain Assembly • With 1.2 GPM Flow Rate • Easy-Install Mounting Nut	6	$237.50
	L-7422-BN	PVD Brushed Nickel		6	$265.20
	L-7422-BG	PVD Brushed Gold		6	$309.50
	L-7422-MB	Matte Black		6	$283.40
	L-7432 NEW	Chrome	• Two-Handle Lavatory Widespread Faucet • Lever Handles • 90-Degree Spout • 5-1/2" Reach, 2-7/8" From Deck to Aerator • Ceramic Disc Cartridges • 3-Hole 4" to 16" Installation • Brass Pop-Up Drain Assembly • With 1.2 GPM Flow Rate • Easy-Install Mounting Nut	6	$224.00
	L-7432-BN NEW	PVD Brushed Nickel		6	$242.00
	L-7432-MB NEW	Matte Black		6	$247.00
	L-7520	Chrome	• Two-Handle Bathroom Faucet • Lever Handles • 4" Reach, 5" From Deck to Aerator • Ceramic Disc Cartridges • 3-Hole 4" Installation • 50/50 Pop-Up Drain Assembly • With 1.2 GPM Flow Rate	8	$178.70
	L-7520-BN	PVD Brushed Nickel		8	$220.70
	L-7520B	Chrome	• Builder Tract Pack	8	$174.10
	L-7520B-BN	PVD Brushed Nickel		8	$207.30
	L-7522	Chrome	• Two-Handle Bathroom Faucet • Lever Handles • 4" Reach, 5" From Deck to Aerator • Ceramic Disc Cartridges • 3-Hole 4" Installation • Brass Pop-Up Drain Assembly • With 1.2 GPM Flow Rate	8	$183.10
	L-7522-BN	PVD Brushed Nickel		8	$215.80
	L-7522-MB	Matte Black		8	$209.70
	L-7522B	Chrome	• Builder Tract Pack	8	$176.80

i2v

PRESSURE BALANCE TRIM SETS

	MODEL#	FINISH	DESCRIPTION	CASE	PRICE
	T-2380	Chrome	• Single-Handle Tub & Shower Trim Set • Lever Handle • Ceramic Disc Cartridge With Temperature Limit Cap • Single-Function 3-3/4" Showerhead, Arm & Flange • Combo 1/2" IPS/Slip-On Diverter Tub Spout With Escutcheon • With 1.75 GPM Flow Rate • For Use With V-2300B or V-2400B Series Valves – Valves Not Included	12	$107.90
	T-2380-BN	PVD Brushed Nickel		12	$136.50
	T-2380-MB	Matte Black		12	$143.30
	TD-2380-ADA	Chrome	• Single-Handle Tub & Shower Trim Set With Handheld • Lever Handle – Faceplate • Single-Function 3-3/4" Showerhead – 1.75 GPM Flow Rate, Arm & Flange • Combo 1/2" IPS/Slip-On Diverter Tub Spout With Escutcheon • For Use With V-2500B Valve – Valve Not Included • Three-Function Handheld Showerhead With Non-Positive/Shut Off – 1.75 GPM With 60" Stainless-Steel Flex Hose • 24" Grab/Slide Bar and Brass Drop Ell With Vacuum Breaker	6	$248.30
	TD-2380-ADA-BN	PVD Brushed Nickel		6	$367.80
	TD-2380-ADA-MB	Matte Black		6	$386.30
	T-2381	Chrome	• Single-Handle Tub Trim Set • Lever Handle • Ceramic Disc Cartridge With Temperature Limit Cap • Combo 1/2" IPS/Slip-On Tub Spout With Escutcheon • For Use With V-2300B or V-2400B Series Valves – Valves Not Included	12	$67.20
	T-2381-BN	PVD Brushed Nickel		12	$90.30
	T-2382	Chrome	• Single-Handle Shower Trim Set • Lever Handle • Ceramic Disc Cartridge With Temperature Limit Cap • Single-Function 3-3/4" Showerhead, Arm & Flange • With 1.75 GPM Flow Rate • For Use With V-2300B or V-2400B Series Valves – Valves Not Included	12	$86.60
	T-2382-BN	PVD Brushed Nickel		12	$107.90
	T-2382-MB	Matte Black		12	$113.60
	T-2382-6RL	Chrome	• Single-Handle Shower Trim Set • Lever Handle • Ceramic Disc Cartridge With Temperature Limit Cap • Single Function 6" Rain Showerhead, 15" L Shape Shower Arm & Flange • With 1.75 GPM Flow Rate • For Use With V-2300B or V-2400B Series Valves – Valves Not Included	12	$148.40

i2v

PRESSURE BALANCE TRIM SETS

	MODEL#	FINISH	DESCRIPTION	CASE	PRICE
	TD-2382-ADA	Chrome	• Single-Handle Shower Trim Set With Handheld • Lever Handle – Faceplate • Single-Function 3-3/4" Showerhead, Arm & Flange • With 1.75 GPM Flow Rate • For Use With V-2500B Valve – Valve Not Included • Three-Function Handheld Showerhead With Non-Positive/Shut Off – 1.75 GPM With 60" Stainless-Steel Flex Hose • 24" Grab/Slide Bar and Brass Drop Ell With Vacuum Breaker	6	$227.70
	TD-2382-ADA-BN	PVD Brushed Nickel		6	$336.90
	TD-2382-ADA-MB	Matte Black		6	$354.40
	T-2384	Chrome	• Single-Handle Tub & Shower Trim Set • Lever Handle • Ceramic Disc Cartridge With Temperature Limit Cap • Single-Function Rain Showerhead, Arm & Flange • Extended Combo 1/2" IPS/Slip-On Diverter Tub Spout With Escutcheon • With 1.75 GPM Flow Rate • For Use With V-2300B or V-2400B Series Valves – Valves Not Included	12	$142.30
	T-2384-BN	PVD Brushed Nickel		12	$178.50
	T-2384-MB	Matte Black		12	$182.90
	T-2384-6RL	Chrome	• Single-Handle Tub & Shower Trim Set • Lever Handle • Ceramic Disc Cartridge With Temperature Limit Cap • Single Function 6" Rain Showerhead, 15" L Shape Shower Arm & Flange • Extended Combo 1/2" IPS/Slip-On Diverter Tub Spout With Escutcheon • With 1.75 GPM Flow Rate • For Use With V-2300B or V-2400B Series Valves – Valves Not Included	12	$170.80
	T-2384-6RL-BN	PVD Brushed Nickel		12	$227.60
	T-2384-7S NEW	Chrome	• Single-Handle Tub & Shower Trim Set • Lever Handle – Faceplate • Ceramic Disc Cartridge With Temperature Limit Cap • Single-Function Rain Showerhead, Arm & Flange • Extended 7" Front Lift Combo 1/2" IPS/Slip-On Diverter Tub Spout With Escutcheon • With 1.75 GPM Flow Rate • For Use With V-2300B or V-2400B Series Valves – Valves Not Included	12	$145.00
	T-2384-7S-BN NEW	PVD Brushed Nickel		12	$184.00
	T-2384-7S-MB NEW	Matte Black		12	$195.00
	T-2385	Chrome	• Single-Handle Shower Trim Set • Lever Handle – Faceplate • Ceramic Disc Cartridge With Temperature Limit Cap • Single-Function Rain Showerhead, Arm & Flange • With 1.75 GPM Flow Rate • For Use With V-2300B or V-2400B Series Valves – Valves Not Included	12	$105.40
	T-2385-BN	PVD Brushed Nickel		12	$130.70
	T-2385-MB	Matte Black		12	$138.00

PRESSURE BALANCE TRIM SETS

	MODEL#	FINISH	DESCRIPTION	CASE	PRICE
	T-2386	Chrome	• Single-Handle Tub & Shower Trim Set • Lever Handle • Ceramic Disc Cartridge With Temperature Limit Cap • Three Function 4-5/8" Showerhead, Arm & Flange • Combo 1/2" IPS/Slip-On Diverter Tub Spout With Escutcheon • With 1.75 GPM Flow Rate • For Use With V-2300B or V-2400B Series Valves – Valves Not Included	12	$123.70
	T-2386-BN	PVD Brushed Nickel		12	$153.90
	T-2387	Chrome	• Single-Handle Shower Trim Set • Lever Handle • Ceramic Disc Cartridge With Temperature Limit Cap • Three Function 4-5/8" Showerhead, Arm & Flange • With 1.75 GPM Flow Rate • For Use With V-2300B or V-2400B Series Valves – Valves Not Included	12	$101.00
	T-2387-BN	PVD Brushed Nickel		12	$123.60
	T-2383	Chrome	• Single-Handle Valve Trim Set • Lever Handle • Ceramic Disc Cartridge With Temperature Limit Cap • For Use With V-2300B or V-2400B Series Valves – Valves Not Included	12	$53.70
	T-2383-BN	PVD Brushed Nickel		12	$64.90
	P-2280T	Chrome	• Single-Handle Diverter Trim Set • Lever Handle • Diverter Valve Faceplate • Diverter Valve Sleeve • For Use With 4100B Valve – Valve Not Included	12	$84.50
	P-2280T-BN	PVD Brushed Nickel		12	$94.20
	P-2280T-MB	Matte Black		12	$95.70

ROMAN TUB TRIM SETS

	MODEL#	FINISH	DESCRIPTION	CASE	PRICE
	P-1171T	Chrome	• Two-Handle Roman Tub Trim Set • Lever Handles • Gooseneck Rigid Spout • 8" Reach • 3-Hole 8" to 16" Installation • Trim Only, P-1131B Valve Required	6	$176.80
	P-1171T-BN	PVD Brushed Nickel		6	$224.60
	P-1171T-BG NEW	PVD Brushed Gold		6	$313.95
	P-1171T-MB NEW	Matte Black		6	$235.83

i3

SINGLE HANDLE PULL-DOWN KITCHEN FAUCETS

	MODEL#	FINISH	DESCRIPTION	CASE	PRICE
	K-5060	Chrome	• Single-Handle Pull-Down Kitchen Faucet • Lever Handle • Pull-Down Head with 2 Spray Patterns, Swivel 360 Degree With Quick-Connect Spray Head Hose • 7-1/2" Reach, 8-15/16" From Deck to Aerator • Ceramic Disc Cartridge With Temperature Limit Cap • 1- or 3-Hole 8" Installation, Deck Cover Plate Included • Ball-Joint Swivel Spray Head • Easy-Install 30" Flex Supply Lines With 3/8" Connections • With 1.5 GPM Flow Rate	6	$259.60
	K-5060-BN	PVD Brushed Nickel		6	$317.30
	K-5060-MB	Matte Black		6	$320.40
	K-5070	Chrome	• Single-Handle Pre-Rinse Spring Pull-Down Kitchen Faucet • Lever Handle • Pull-Down Head with 2 Spray Patterns, Swivel 360 Degree With Quick-Connect Spray Head Hose • 7-5/8" Reach, 7-15/16" From Deck to Aerator • Ceramic Disc Cartridge With Temperature Limit Cap • 1- or 3-Hole 8" Installation, Deck Cover Plate Included • Spring-Style Spout Swivels 360 Degree • Easy-Install 30" Flex Supply Lines With 3/8" Connections • With 1.5 GPM Flow Rate	6	$308.00
	K-5070-BN	PVD Brushed Nickel		6	$353.50
	K-5070-MB	Matte Black		6	$378.80

i3

SINGLE HANDLE BATHROOM FAUCETS

	MODEL#	FINISH	DESCRIPTION	CASE	PRICE
	L-6010	Chrome	• Single-Handle Bathroom Faucet • Lever Handle • 4-3/8" Reach, 2-5/8" From Deck to Aerator • Ceramic Disc Cartridge • 1-Hole Installation • 50/50 Pop-Up Drain Assembly • Easy-Install 18" Flex Supply Lines With 3/8" Connections • With 1.2 GPM Flow Rate	12	$173.40
	L-6010-BN	PVD Brushed Nickel		12	$226.20
	L-6010-MB	Matte Black		12	$236.90
	L-6010B	Chrome	• Builder Tract Pack	12	$169.70
	L-6010-WD	Chrome	• 1- or 3-Hole 4" Installation • Deck Cover Plate Included	12	$182.20
	L-6010-WD-BN	PVD Brushed Nickel		12	$244.90
	L-6011	Chrome	• Single-Handle Bathroom Faucet • Lever Handle • 4-3/8" Reach, 2-5/8" From Deck to Aerator • Ceramic Disc Cartridge • 1-Hole Installation • No Pop-Up Hole • Easy-Install 18" Flex Supply Lines With 3/8" Connections • With 1.2 GPM Flow Rate	12	$154.50
	L-6011-BN	PVD Brushed Nickel		12	$201.60
	L-6011-WD	Chrome	• 1- or 3-Hole 4" Installation • Deck Cover Plate Included	12	$161.80
	L-6011-WD-BN	PVD Brushed Nickel		12	$215.40
	L-6012	Chrome	• Single-Handle Bathroom Faucet • Lever Handle • 4-3/8" Reach, 2-5/8" From Deck to Aerator • Ceramic Disc Cartridge • 1-Hole Installation • Brass Pop-Up Drain Assembly • Easy-Install 18" Flex Supply Lines With 3/8" Connections • With 1.2 GPM Flow Rate	12	$175.20
	L-6012-BN	PVD Brushed Nickel		12	$240.00
	L-6012B	Chrome	• Builder Tract Pack	12	$185.20
	L-6012-WD	Chrome	• 1- or 3-Hole 4" Installation • Deck Cover Plate Included	12	$185.50
	L-6012-WD-BN	PVD Brushed Nickel		12	$244.80
	L-6013	Chrome	• Single-Handle Bathroom Faucet • Lever Handle • 4-3/8" Reach, 2-5/8" From Deck to Aerator • Ceramic Disc Cartridge • 1-Hole Installation • Push-Down Drain With Overflow • Easy-Install 18" Flex Supply Lines With 3/8" Connections • With 1.2 GPM Flow Rate	12	$180.40
	L-6013-BN	PVD Brushed Nickel		12	$203.90
	L-6015	Chrome	• Single-Handle Bathroom Faucet • Lever Handle • 4-3/8" Reach, 2-5/8" From Deck to Aerator • Ceramic Disc Cartridge • 1-Hole Installation • 50/50 Push-Down Drain With Overflow • Easy-Install 18" Flex Supply Lines With 3/8" Connections • With 1.2 GPM Flow Rate	12	$170.10

i3

PRESSURE BALANCE TRIM SETS

	MODEL#	FINISH	DESCRIPTION	CASE	PRICE
	T-2390	Chrome	• Single-Handle Tub & Shower Trim Set • Lever Handle • Ceramic Disc Cartridge With Temperature Limit Cap • Single-Function 3-3/4" Showerhead, Arm & Flange • Combo 1/2" IPS/Slip-On Diverter Tub Spout With Escutcheon • With 1.75 GPM Flow Rate • For Use With V-2300B or V-2400B Series Valves – Valves Not Included	12	$116.40
	T-2390-BN	PVD Brushed Nickel		12	$150.10
	TD-2390-ADA	Chrome	• Single-Handle Tub & Shower Trim Set With Handheld • Lever Handle – Faceplate • Single-Function 3-3/4" Showerhead – 1.75 GPM Flow Rate, Arm & Flange • Combo 1/2" IPS/Slip-On Diverter Tub Spout With Escutcheon • For Use With V-2500B Valve – Valve Not Included • Three-Function Handheld Showerhead With Non-Positive/Shut Off – 1.75 GPM With 60" Stainless-Steel Flex Hose • 24" Grab/Slide Bar and Brass Drop Ell With Vacuum Breaker	6	$257.50
	TD-2390-ADA-BN	PVD Brushed Nickel		6	$383.20
	TD-2390-ADA-MB	Matte Black		6	$402.80
	T-2391	Chrome	• Single-Handle Tub Trim Set • Lever Handle • Ceramic Disc Cartridge With Temperature Limit Cap • Combo 1/2" IPS/Slip-On Tub Spout With Escutcheon • For Use With V-2300B or V-2400B Series Valves – Valves Not Included	12	$84.30
	T-2391-BN	PVD Brushed Nickel		12	$101.80
	T-2392	Chrome	• Single-Handle Shower Trim Set • Lever Handle • Ceramic Disc Cartridge With Temperature Limit Cap • Single-Function 3-3/4" Showerhead, Arm & Flange • With 1.75 GPM Flow Rate • For Use With V-2300B or V-2400B Series Valves – Valves Not Included	12	$92.40
	T-2392-BN	PVD Brushed Nickel		12	$115.10

PRESSURE BALANCE TRIM SETS

	MODEL#	FINISH	DESCRIPTION	CASE	PRICE
	TD-2392-ADA	Chrome	• Single-Handle Shower Trim Set With Handheld • Lever Handle – Faceplate • Single-Function 3-3/4" Showerhead, Arm & Flange • With 1.75 GPM Flow Rate • For Use With V-2500B Valve – Valve Not Included • Three-Function Handheld Showerhead With Non-Positive/Shut Off – 1.75 GPM With 60" Stainless-Steel Flex Hose • 24" Grab/Slide Bar and Brass Drop Ell With Vacuum Breaker	6	$230.60
	TD-2392-ADA-BN	PVD Brushed Nickel		6	$343.80
	TD-2392-ADA-MB	Matte Black		6	$364.70
	T-2394	Chrome	• Single-Handle Tub & Shower Trim Set • Lever Handle • Ceramic Disc Cartridge With Temperature Limit Cap • Single-Function 4" Square Showerhead, Arm & Flange • Combo 1/2" IPS/Slip-On Diverter Tub Spout With Escutcheon • With 1.75 GPM Flow Rate • For Use With V-2300B or V-2400B Series Valves – Valves Not Included	12	$122.50
	T-2394-BN	PVD Brushed Nickel		12	$158.00
	T-2394-6	Chrome	• Single-Handle Tub & Shower Trim Set • Lever Handle • Ceramic Disc Cartridge With Temperature Limit Cap • Single-Function 6" Square Showerhead, Arm & Flange • Combo 1/2" IPS/Slip-On Diverter Tub Spout With Escutcheon • With 1.75 GPM Flow Rate • For Use With V-2300B or V-2400B Series Valves – Valves Not Included	12	$136.90
	T-2394-6-BN	PVD Brushed Nickel		12	$181.50
	T-2395	Chrome	• Single-Handle Shower Trim Set • Lever Handle • Ceramic Disc Cartridge With Temperature Limit Cap • Single-Function 4" Square Showerhead, Arm & Flange • With 1.75 GPM Flow Rate • For Use With V-2300B or V-2400B Series Valves – Valves Not Included	12	$101.40
	T-2395-BN	PVD Brushed Nickel		12	$127.00
	T-2395-MB	Matte Black		12	$134.00

i3

SINGLE-HANDLE TUB & SHOWER TRIM SETS

	MODEL#	FINISH	DESCRIPTION	CASE	PRICE
	T-2395-6	Chrome	• Single-Handle Shower Trim Set • Lever Handle • Ceramic Disc Cartridge With Temperature Limit Cap • Single-Function 6" Square Showerhead, Arm & Flange • With 1.75 GPM Flow Rate • For Use With V-2300B or V-2400B Series Valves – Valves Not Included	12	$110.10
	T-2395-6-BN	PVD Brushed Nickel		12	$142.50
	T-2395-6L	Chrome	• Single-Handle Shower Trim Set • Lever Handle • Ceramic Disc Cartridge With Temperature Limit Cap • Single-Function 6" Square Showerhead, 15" L Shape Shower Arm & Flange • With 1.75 GPM Flow Rate • For Use With V-2300B or V-2400B Series Valves – Valves Not Included	12	$140.10
	T-2395-6L-BN	PVD Brushed Nickel		12	$180.00
	T-2396	Chrome	• Single-Handle Tub & Shower Trim Set • Lever Handle • Ceramic Disc Cartridge With Temperature Limit Cap • Single-Function 3-3/4" Showerhead, Arm & Flange • Extended Combo 1/2" IPS/Slip-On Diverter Tub Spout With Escutcheon • With 1.75 GPM Flow Rate • For Use With V-2300B or V-2400B Series Valves – Valves Not Included	12	$160.30
	T-2396-BN	PVD Brushed Nickel		12	$186.80
	T-2397	Chrome	• Single-Handle Tub Trim Set • Lever Handle • Ceramic Disc Cartridge With Temperature Limit Cap • Extended Combo 1/2" IPS/Slip-On Tub Spout With Escutcheon • For Use With V-2300B or V-2400B Series Valves – Valves Not Included	12	$127.50
	T-2397-BN	PVD Brushed Nickel		12	$151.70

SINGLE-HANDLE TUB & SHOWER TRIM SETS

	MODEL#	FINISH	DESCRIPTION	CASE	PRICE
	T-2398	Chrome	• Single-Handle Tub & Shower Trim Set • Lever Handle • Ceramic Disc Cartridge With Temperature Limit Cap • Single-Function 4" Square Showerhead, Arm & Flange • Extended Combo 1/2" IPS/Slip-On Diverter Tub Spout With Escutcheon • With 1.75 GPM Flow Rate • For Use With V-2300B or V-2400B Series Valves – Valves Not Included	12	$168.50
	T-2398-BN	PVD Brushed Nickel		12	$197.10
	T-2398-MB	Matte Black		12	$202.70
	T-2398-6	Chrome	• Single-Handle Tub & Shower Trim Set • Lever Handle • Ceramic Disc Cartridge With Temperature Limit Cap • Single-Function 6" Square Showerhead, Arm & Flange • Extended Combo 1/2" IPS/Slip-On Diverter Tub Spout With Escutcheon • With 1.75 GPM Flow Rate • For Use With V-2300B or V-2400B Series Valves – Valves Not Included	12	$176.00
	T-2398-6-BN	PVD Brushed Nickel		12	$217.70

SINGLE HANDLE TUB TRIM SETS

	MODEL#	FINISH	DESCRIPTION	CASE	PRICE
	P-2290T	Chrome	• Single-Handle Diverter Trim Set • Lever Handle • Diverter Valve Faceplate • Diverter Valve Sleeve • For Use With 4100B Valve – Valve Not Included	12	$82.90
	P-2290T-BN	PVD Brushed Nickel		12	$92.40
	T-2393	Chrome	• Single-Handle Valve Trim Set • Lever Handle • Ceramic Disc Cartridge With Temperature Limit Cap • For Use With V-2300B or V-2400B Series Valves – Valves Not Included	12	$62.10
	T-2393-BN	PVD Brushed Nickel		12	$75.20
	T-2393-MB	Matte Black		12	$81.20

i4

NEW SERIES

SINGLE HANDLE BATHROOM FAUCETS

	MODEL#	FINISH	DESCRIPTION	CASE	PRICE
	L-6000	Polished Chrome	• Single-Handle Lavatory Faucet • Lever Handle • 5" Reach, 4-3/4" From Deck to Aerator • Ceramic Disc Cartridge • 1-Hole Installation • 50/50 Pop-Up Drain Assembly • Easy-Install 18" Flex Supply Lines With 3/8" Connections • With 1.2 GPM Flow Rate	12	$196.00
	L-6000-BN	PVD Brushed Nickel		12	$221.20
	L-6000-MB	Matte Black		12	$230.00
	L-6000B	Chrome	• Builder Tract Pack	12	$196.00
	L-6000-WD	Chrome	• 1- or 3-Hole 4" Installation • Deck Cover Plate Included	12	$206.00
	L-6000-WD-BN	PVD Brushed Nickel		12	$233.00
	L-6000-WD-MB	Matte Black		12	$257.00
	L-6001	Chrome	• Single-Handle Lavatory Faucet • Lever Handle • 5" Reach, 4-3/4" From Deck to Aerator • Ceramic Disc Cartridge • 1-Hole Installation • With Pop-Up Hole Cover • Easy-Install 18" Flex Supply Lines With 3/8" Connections • With 1.2 GPM Flow Rate	12	$180.00
	L-6001-BN	PVD Brushed Nickel		12	$199.00
	L-6001-MB	Matte Black		12	$209.00
	L-6001-WD	Chrome	• Deck Cover Plate Included	12	$190.00
	L-6001-WD-BN	PVD Brushed Nickel		12	$212.00
	L-6002	Chrome	• Single-Handle Lavatory Faucet • Lever Handle • 5" Reach, 4-3/4" From Deck to Aerator • Ceramic Disc Cartridge • 1-Hole Installation • Brass Pop-Up Drain Assembly • Easy-Install 18" Flex Supply Lines With 3/8" Connections • With 1.2 GPM Flow Rate	12	$204.00
	L-6002-BN	PVD Brushed Nickel		12	$227.00
	L-6002-BG	PVD Brushed Gold		12	$275.00
	L-6002-MB	Matte Black		12	$238.00
	L-6002B	Chrome	• Builder Tract Pack	12	$203.00
	L-6002-WD	Chrome	• Deck Cover Plate Included	12	$214.00
	L-6002-WD-BN	PVD Brushed Nickel		12	$240.00
	L-6002-WD-BG	PVD Brushed Gold		12	$301.00
	L-6002-WD-MB	Matte Black		12	$265.00
	L-6003	Chrome	• Single-Handle Lavatory Faucet • Lever Handle • 5" Reach, 4-3/4" From Deck to Aerator • Ceramic Disc Cartridge • 1-Hole Installation • Push-Down Drain With Overflow • Easy-Install 18" Flex Supply Lines With 3/8" Connections • With 1.2 GPM Flow Rate	12	$204.00
	L-6003-BN	PVD Brushed Nickel		12	$227.00
	L-6003-MB	Matte Black		12	$238.00
	L-6005	Chrome	• Single-Handle Lavatory Faucet • Lever Handle • 5" Reach, 4-3/4" From Deck to Aerator • Ceramic Disc Cartridge • 1-Hole Installation • 50/50 Push-Down Drain With Overflow • Easy-Install 18" Flex Supply Lines With 3/8" Connections • With 1.2 GPM Flow Rate	12	$196.00
	L-6005-BN	PVD Brushed Nickel		12	$219.00
	L-6005-MB	Matte Black		12	$230.00

SINGLE HANDLE BATHROOM FAUCETS

	MODEL#	FINISH	DESCRIPTION	CASE	PRICE
	L-6090	Chrome	• Single-Handle Bathroom Faucet • Lever Handle • 4-3/8" Reach, 2-5/8" From Deck to Aerator • Ceramic Disc Cartridge • 1-Hole Installation • 50/50 Pop-Up Drain Assembly • Easy-Install 18" Flex Supply Lines With 3/8" Connections • With 1.2 GPM Flow Rate	12	$251.60
	L-6090-BN	PVD Brushed Nickel		12	$285.20
	L-6090-MB	Matte Black		12	$281.00
	L-6090B	Chrome	• Builder Tract Pack	12	$247.00
	L-6090-WD	Chrome	• 1- or 3-Hole 4" Installation • Deck Cover Plate Included	12	$251.70
	L-6090-WD-BN	PVD Brushed Nickel		12	$297.20
	L-6090-WD-MB NEW	Matte Black		12	$312.06
	L-6092	Chrome	• Single-Handle Bathroom Faucet • Lever Handle • 4-3/8" Reach, 2-5/8" From Deck to Aerator • Ceramic Disc Cartridge • 1-Hole Installation • Brass Pop-Up Drain Assembly • Easy-Install 18" Flex Supply Lines With 3/8" Connections • With 1.2 GPM Flow Rate	12	$252.70
	L-6092-BN	PVD Brushed Nickel		12	$280.30
	L-6092-BG	PVD Brushed Gold		12	$301.60
	L-6092-MB	Matte Black		12	$288.70
	L-6092B	Chrome	• Builder Tract Pack	12	$249.00
	L-6092-WD	Chrome	• 1- or 3-Hole 4" Installation • Deck Cover Plate Included	12	$258.40
	L-6092-WD-BN	PVD Brushed Nickel		12	$306.40
	L-6092-WD-BG NEW	PVD Brushed Gold		12	$326.56
	L-6092-WD-MB NEW	Matte Black		12	$321.72
	L-6093	Chrome	• Single-Handle Bathroom Faucet • Lever Handle • 4-3/8" Reach, 2-5/8" From Deck to Aerator • Ceramic Disc Cartridge • 1-Hole Installation • Touch-Down Drain • Easy-Install 18" Flex Supply Lines With 3/8" Connections • With 1.2 GPM Flow Rate	12	$242.20
	L-6093-BN	PVD Brushed Nickel		12	$281.10
	L-6093-MB	Matte Black		12	$286.60
	L-6095	Chrome	• Single-Handle Bathroom Faucet • Lever Handle • 4-3/8" Reach, 2-5/8" From Deck to Aerator • Ceramic Disc Cartridge • 1-Hole Installation • 50/50 Push-Down Drain With Overflow • Easy-Install 18" Flex Supply Lines With 3/8" Connections • With 1.2 GPM Flow Rate	12	$234.20
	L-6095-BN	PVD Brushed Nickel		12	$274.30

i4

TWO HANDLE BATHROOM FAUCETS

	MODEL#	FINISH	DESCRIPTION	CASE	PRICE
	L-7400 NEW	Polished Chrome	• Two-Handle Lavatory Widespread Faucet • Lever Handles • 5" Reach, 4-3/4" From Deck to Aerator • Ceramic Disc Cartridges • 3-Hole 4" to 16" Installation • 50/50 Pop-Up Drain Assembly • With 1.2 GPM Flow Rate • Easy-Install Mounting Nut	6	$252.50
	L-7400-BN NEW	PVD Brushed Nickel		6	$299.00
	L-7400-MB NEW	Matte Black		6	$311.00
	L-7402 NEW	Chrome	• Two-Handle Lavatory Widespread Faucet • Lever Handles • 5" Reach, 4-3/4" From Deck to Aerator • Ceramic Disc Cartridges • 3-Hole 4" to 16" Installation • Brass Pop-Up Drain Assembly • With 1.2 GPM Flow Rate • Easy-Install Mounting Nut	6	$270.00
	L-7402-BG NEW	PVD Brushed Gold		6	$395.80
	L-7402-BN NEW	PVD Brushed Nickel		6	$320.00
	L-7402-MB NEW	Matte Black		6	$336.00
	L-7490	Chrome	• Two-Handle Bathroom Widespread Faucet • Lever Handles • 90-Degree Spout • 4-1/2" Reach, 4-3/16" From Deck to Aerator • Ceramic Disc Cartridges • 3-Hole 4" to 16" Installation • 50/50 Pop-Up Drain Assembly • With 1.2 GPM Flow Rate • Easy-Install Mounting Nut	6	$306.70
	L-7490-BN	PVD Brushed Nickel		6	$364.40
	L-7490-MB	Matte Black		6	$362.70
	L-7492	Chrome	• Two-Handle Bathroom Widespread Faucet • Lever Handles • 90-Degree Spout • 4-1/2" Reach, 4-3/16" From Deck to Aerator • Ceramic Disc Cartridges • 3-Hole 4" to 16" Installation • Brass Pop-Up Drain Assembly • With 1.2 GPM Flow Rate • Easy-Install Mounting Nut	6	$332.60
	L-7492-BN	PVD Brushed Nickel		6	$366.30
	L-7492-MB	Matte Black		6	$380.70

PRESSURE BALANCE TRIM SETS

	MODEL#	FINISH	DESCRIPTION	CASE	PRICE
	T-23910	Chrome	• Single-Handle Tub & Shower Trim Set • Lever Handle • Ceramic Disc Cartridge With Temperature Limit Cap • Single-Function 3-3/4" Showerhead, Arm & Flange • Combo 1/2" IPS/Slip-On Diverter Tub Spout With Escutcheon • With 1.75 GPM Flow Rate • For Use With V-2300B or V-2400B Series Valves – Valves Not Included	12	$135.60
	T-23910-BN	PVD Brushed Nickel		12	$177.30
	T-23910-MB	Matte Black		12	$177.40
	TD-23910-ADA	Chrome	• Single-Handle Tub & Shower Trim Set With Handheld • Lever Handle – Faceplate • Single-Function 3-3/4" Showerhead – 1.75 GPM Flow Rate, Arm & Flange • Combo 1/2" IPS/Slip-On Diverter Tub Spout With Escutcheon • For Use With V-2500B Valve – Valve Not Included • Three-Function Handheld Showerhead With Non-Positive/Shut Off – 1.75 GPM With 60" Stainless-Steel Flex Hose • 24" Grab/Slide Bar and Brass Drop Ell With Vacuum Breaker	6	$256.50
	TD-23910-ADA-BN	PVD Brushed Nickel		6	$383.20
	TD-23910-ADA-MB	Matte Black		6	$402.80
	T-23911	Chrome	• Single-Handle Tub Trim Set • Lever Handle • Ceramic Disc Cartridge With Temperature Limit Cap • Combo 1/2" IPS/Slip-On Tub Spout With Escutcheon • For Use With V-2300B or V-2400B Series Valves – Valves Not Included	12	$113.60
	T-23911-BN	PVD Brushed Nickel		12	$140.70
	T-23911-MB	Matte Black		12	$144.90
	T-23912	Chrome	• Single-Handle Shower Trim Set • Lever Handle • Ceramic Disc Cartridge With Temperature Limit Cap • Single-Function 3-3/4" Showerhead, Arm & Flange • With 1.75 GPM Flow Rate • For Use With V-2300B or V-2400B Series Valves – Valves Not Included	12	$115.80
	T-23912-BN	PVD Brushed Nickel		12	$140.70
	T-23912-MB	Matte Black		12	$144.90
	TD-23912-ADA	Chrome	• Single-Handle Shower Trim Set With Handheld • Lever Handle – Faceplate • Single-Function 3-3/4" Showerhead – 1.75 GPM Flow Rate, Arm & Flange • For Use With V-2500B Valve – Valve Not Included • Three-Function Handheld Showerhead With Non-Positive/Shut Off – 1.75 GPM With 60" Stainless-Steel Flex Hose • 24" Grab/Slide Bar and Brass Drop Ell With Vacuum Breaker	6	$233.90
	TD-23912-ADA-BN	PVD Brushed Nickel		6	$349.20
	TD-23912-ADA-MB	Matte Black		6	$366.70

i4

PRESSURE BALANCE TRIM SETS

	MODEL#	FINISH	DESCRIPTION	CASE	PRICE
	T-23914	Chrome	• Single-Handle Tub & Shower Trim Set • Lever Handle • Ceramic Disc Cartridge With Temperature Limit Cap • Three Function 4-5/8" Showerhead, Arm & Flange • Extended Combo 1/2" IPS/Slip-On Diverter Tub Spout With Escutcheon • With 1.75 GPM Flow Rate • For Use With V-2300B or V-2400B Series Valves – Valves Not Included	12	$170.50
	T-23914-BN	PVD Brushed Nickel		12	$214.60
	T-23914-MB	Matte Black		12	$212.50
	T-23915	Chrome	• Single-Handle Shower Trim Set • Lever Handle • Ceramic Disc Cartridge With Temperature Limit Cap • Three Function 4-5/8" Showerhead, Arm & Flange • With 1.75 GPM Flow Rate • For Use With V-2300B or V-2400B Series Valves – Valves Not Included	12	$136.50
	T-23915-BN	PVD Brushed Nickel		12	$162.80
	T-23915-MB	Matte Black		12	$171.00
	T-23916	Chrome	• Single-Handle Tub Trim Set • Lever Handle • Ceramic Disc Cartridge With Temperature Limit Cap • Extended Combo 1/2" IPS/Slip-On Tub Spout With Escutcheon • For Use With V-2300B or V-2400B Series Valves – Valves Not Included	12	$114.50
	T-23916-BN	PVD Brushed Nickel		12	$140.30
	T-23916-MB	Matte Black		12	$140.30
	P-2291T	Chrome	• Single-Handle Diverter Trim Set • Lever Handle • Diverter Valve Faceplate • Diverter Valve Sleeve • For Use With 4100B Valve – Valve Not Included	12	$83.70
	P-2291T-BN	PVD Brushed Nickel		12	$93.30
	P-2291T-MB	Matte Black		12	$97.60
	T-23913	Chrome	• Single-Handle Valve Trim Set • Lever Handle • Ceramic Disc Cartridge With Temperature Limit Cap • For Use With V-2300B or V-2400B Series Valves – Valves Not Included	12	$78.10
	T-23913-BN	PVD Brushed Nickel		12	$95.70
	T-23913-MB	Matte Black		12	$100.40

ACCENT

SINGLE HANDLE KITCHEN FAUCETS

MODEL#	FINISH	DESCRIPTION	CASE	PRICE
K-5040	Chrome	• Single-Handle Pull-Down Kitchen Faucet • Lever Handle • Pull-Down Head with 2 Spray Patterns, Swivel 360 Degree With Quick-Connect Spray Head Hose • 8" Reach, 7-1/2" From Deck to Aerator • Ceramic Disc Cartridge • 1- or 3-Hole 8" Installation, Deck Cover Plate Included • Ball-Joint Swivel Spray Head • Easy-Install 30" Flex Supply Lines With 3/8" Connections • With 1.5 GPM Flow Rate	6	$236.50
K-5040-BN	PVD Brushed Nickel		6	$296.80
K-5040-ORB	Oil Rubbed Bronze		6	$317.30
K-5040-MZ	Moroccan Bronze		6	$330.30

MODEL#	FINISH	DESCRIPTION	CASE	PRICE
K-5441	Chrome	• Single-Handle Kitchen Faucet • Lever Handle • Gooseneck 360 Degree Swivel Spout • 8-1/4" Reach, 10-3/8" From Deck to Aerator • Ceramic Disc Cartridge With Temperature Limit Cap • 2- or 4-Hole Installation • Side-Spray Assembly With Quick-Connect Spray Head Hose • With 1.5 GPM Flow Rate	6	$270.30
K-5441-BN	PVD Brushed Nickel		6	$318.00

SINGLE-HANDLE PRE-RINSE SPRING PULL-DOWN KITCHEN FAUCETS

MODEL#	FINISH	DESCRIPTION	CASE	PRICE
K-5045 NEW	Chrome	• Single-Handle Pre-Rinse Spring Pull-Down Kitchen Faucet • Lever Handle • Pull-Down Head with 2 Spray Patterns, Swivel 360 Degree With Quick-Connect Spray Head Hose • 8-5/8" Reach, 6-3/4" From Deck to Aerator • Ceramic Disc Cartridge • 1- or 3-Hole 8" Installation, Deck Cover Plate Included • Spring-Style Spout Swivels 360 Degree • Easy-Install 30" Flex Supply Lines With 3/8" Connections • With 1.5 GPM Flow Rate	6	$266.80
K-5045-BN NEW	PVD Brushed Nickel		6	$311.10
K-5045-ORB NEW	Oil Rubbed Bronze		6	$358.00

ACCENT

TWO HANDLE KITCHEN FAUCETS

	MODEL#	FINISH	DESCRIPTION	CASE	PRICE
	K-5340	Chrome	• Two-Handle Kitchen Faucet • Lever Handles • Gooseneck 360 Degree Swivel Spout • 8-7/16" Reach, 8-1/8" From Deck to Aerator • Washerless Cartridge Operation • 3-Hole 8" Installation • With 1.5 GPM Flow Rate	6	$96.80
	K-5340-BN	PVD Brushed Nickel		6	$139.20
	K-5342	Chrome	• Two-Handle Kitchen Faucet • Lever Handles • Gooseneck 360 Degree Swivel Spout • 8-7/16" Reach, 8-1/8" From Deck to Aerator • Washerless Cartridge Operation • 4-Hole 8" Installation • Side-Spray Assembly With Quick-Connect Spray Head Hose • With 1.5 GPM Flow Rate	6	$118.70
	K-5342-BN	PVD Brushed Nickel		6	$167.50
	K-5342-ORB	Oil Rubbed Bronze		6	$185.20
	K-5350	Chrome	• Two-Handle Kitchen Faucet • ADA Wrist-Blade Handles • Gooseneck 360 Degree Swivel Spout • 8-7/16" Reach, 8-1/8" From Deck to Aerator • Washerless Cartridge Operation • 3-Hole 8" Installation • With 1.5 GPM Flow Rate	6	$99.70
	K-5370	Chrome	• Two-Handle Kitchen Faucet • Lever Handles • Gooseneck 360 Degree Swivel Spout • 8-7/16" Reach, 8-1/8" From Deck to Aerator • Washerless Cartridge Operation • 3-Hole 8" Installation • With 1.5 GPM Flow Rate	6	$102.20
	K-5370-BN	PVD Brushed Nickel		6	$147.40
	K-5372	Chrome	• Two-Handle Kitchen Faucet • Lever Handles • Gooseneck 360 Degree Swivel Spout • 8-7/16" Reach, 8-1/8" From Deck to Aerator • Washerless Cartridge Operation • 4-Hole 8" Installation • Side-Spray Assembly With Quick-Connect Spray Head Hose • With 1.5 GPM Flow Rate	6	$126.00
	K-5372-BN	PVD Brushed Nickel		6	$170.80

ACCENT

TWO HANDLE BAR FAUCETS

	MODEL#	FINISH	DESCRIPTION	CASE	PRICE
	B-8150	Chrome	• Two-Handle Bar Faucet • Lever Handles • Gooseneck 360 Degree Swivel Spout • 5-1/4" Reach, 5-13/16" From Deck to Aerator • 5" Reach, 6" From Deck to Aerator • Washerless Cartridge Operation • 2- or 3-Hole 4" Installation	12	$83.00
	B-8150-BN	PVD Brushed Nickel		12	$111.30
	B-8160	Chrome	• Two-Handle Bar Faucet • Lever Handles • Gooseneck 360 Degree Swivel Spout • 5-1/4" Reach, 5-13/16" From Deck to Aerator • Washerless Cartridge Operation • 2- or 3-Hole 4" Installation • With 1.5 GPM Flow Rate	12	$75.50
	B-8160-BN	PVD Brushed Nickel		12	$97.30

ACCENT

TWO HANDLE BATHROOM FAUCETS

	MODEL#	FINISH	DESCRIPTION	CASE	PRICE
	L-7240	Chrome	• Two-Handle Bathroom Faucet • Lever Handles • 4-1/8" Reach, 1-3/4" From Deck to Aerator • Washerless Cartridge Operation • 3-Hole 4" Installation • 50/50 Pop-Up Drain Assembly • With 1.2 GPM Flow Rate	12	$83.30
	L-7240-BN	PVD Brushed Nickel		12	$101.80
	L-7240-ORB	Oil Rubbed Bronze		12	$114.80
	L-7240B	Chrome	• Builder Tract Pack	12	$83.40
	L-7240B-BN	PVD Brushed Nickel		12	$103.50
	L-7241	Chrome	• Two-Handle Bathroom Faucet • Lever Handles • 4-1/8" Reach, 1-3/4" From Deck to Aerator • Washerless Cartridge Operation • 3-Hole 4" Installation • With 1.2 GPM Flow Rate	12	$70.40
	L-7241-BN	PVD Brushed Nickel		12	$88.00
	L-7242	Chrome	• Two-Handle Bathroom Faucet • Lever Handles • 4-1/8" Reach, 1-3/4" From Deck to Aerator • Washerless Cartridge Operation • 3-Hole 4" Installation • Brass Pop-Up Drain Assembly • With 1.2 GPM Flow Rate	12	$90.60
	L-7242-BN	PVD Brushed Nickel		12	$113.80
	L-7242-ORB	Oil Rubbed Bronze		12	$128.80
	L-7242-MZ	Moroccan Bronze		12	$134.30
	L-7242B	Chrome	• Builder Tract Pack	12	$90.00
	L-7245	Chrome	• Two-Handle Bathroom Faucet • Lever Handles • 4-1/8" Reach, 1-3/4" From Deck to Aerator • Washerless Cartridge Operation • 3-Hole 4" Installation • 50/50 Push-Down Drain With Overflow • With 1.2 GPM Flow Rate	12	$81.70
	L-7245-BN	PVD Brushed Nickel		12	$109.40
	L-7270	Chrome	• Two-Handle Bathroom Faucet • Lever Handles • 4-1/8" Reach, 1-3/4" From Deck to Aerator • Washerless Cartridge Operation • 3-Hole 4" Installation • 50/50 Pop-Up Drain Assembly • With 1.2 GPM Flow Rate	12	$90.70
	L-7270-BN	PVD Brushed Nickel		12	$110.40
	L-7270B-BN	PVD Brushed Nickel	• Builder Tract Pack	12	$104.10
	L-7271	Chrome	• Two-Handle Bathroom Faucet • Lever Handles • 4-1/8" Reach, 1-3/4" From Deck to Aerator • Washerless Cartridge Operation • 3-Hole 4" Installation • With 1.2 GPM Flow Rate	12	$74.70

ACCENT

TWO HANDLE BATHROOM FAUCETS

	MODEL#	FINISH	DESCRIPTION	CASE	PRICE
	L-7272	Chrome	• Two-Handle Bathroom Faucet • Lever Handles • 4-1/8" Reach, 1-3/4" From Deck to Aerator • Washerless Cartridge Operation • 3-Hole 4" Installation • Brass Pop-Up Drain Assembly • With 1.2 GPM Flow Rate	12	$91.90
	L-7272-BN	PVD Brushed Nickel		12	$118.70
	L-7272B	Chrome	• Builder Tract Pack	12	$93.20
	L-7470	Chrome	• Two-Handle Bathroom Widespread Faucet • Lever Handles • Rigid J-Style Spout • 4-3/4" Reach, 3-11/16" From Deck to Aerator • Ceramic Disc Cartridges • 3-Hole 4" to 16" Installation • 50/50 Pop-Up Drain Assembly • With 1.2 GPM Flow Rate • Easy-Install Mounting Nut	6	$225.20
	L-7470-BN	PVD Brushed Nickel		6	$256.00
	L-7470-ORB	Oil Rubbed Bronze		6	$266.50
	L-7472	Chrome	• Two-Handle Bathroom Widespread Faucet • Lever Handles • Rigid J-Style Spout • 4-3/4" Reach, 3-11/16" From Deck to Aerator • Ceramic Disc Cartridges • 3-Hole 4" to 16" Installation • Brass Pop-Up Drain Assembly • With 1.2 GPM Flow Rate • Easy-Install Mounting Nut	6	$237.40
	L-7472-BN	PVD Brushed Nickel		6	$269.10
	L-7472-ORB	Oil Rubbed Bronze		6	$269.80
	L-7570	Chrome	• Two-Handle Bathroom Faucet • Lever Handles • Rigid J-Style Spout • 4-1/16" Reach, 3-11/16" From Deck to Aerator • Ceramic Disc Cartridges • 3-Hole 4" Installation • 50/50 Pop-Up Drain Assembly • With 1.2 GPM Flow Rate	12	$148.90
	L-7570-BN	PVD Brushed Nickel		12	$182.50
	L-7570-ORB	Oil Rubbed Bronze		12	$192.60
	L-7570B	Chrome	• Builder Tract Pack	12	$148.10
	L-7570B-BN	PVD Brushed Nickel		12	$181.10
	L-7572	Chrome	• Two-Handle Bathroom Faucet • Lever Handles • Rigid J-Style Spout • 4-1/16" Reach, 3-11/16" From Deck to Aerator • Ceramic Disc Cartridges • 3-Hole 4" Installation • Brass Pop-Up Drain Assembly • With 1.2 GPM Flow Rate	12	$152.90
	L-7572-BN	PVD Brushed Nickel		12	$185.10
	L-7572-ORB	Oil Rubbed Bronze		12	$198.00
	L-7572B	Chrome	• Builder Tract Pack	12	$153.60

ACCENT

TWO HANDLE BATHROOM FAUCETS

	MODEL#	FINISH	DESCRIPTION	CASE	PRICE
	L-7330	Chrome	• Two-Handle Bathroom Widespread Faucet • Lever Handles • Rigid C-Style Spout • 4-9/16" Reach, 1-7/8" From Deck to Aerator • Ceramic Disc Cartridges • 3-Hole 4" to 16" Installation • 50/50 Pop-Up Drain Assembly • With 1.2 GPM Flow Rate	6	$178.00
	L-7330-BN	PVD Brushed Nickel		6	$222.80
	L-7330-ORB	Oil Rubbed Bronze		6	$233.30
	L-7332	Chrome	• Two-Handle Bathroom Widespread Faucet • Lever Handles • Rigid C-Style Spout • 4-9/16" Reach, 1-7/8" From Deck to Aerator • Ceramic Disc Cartridges • 3-Hole 4" to 16" Installation • Brass Pop-Up Drain Assembly • With 1.2 GPM Flow Rate • Easy-Install Mounting Nut	6	$180.30
	L-7332-BN	PVD Brushed Nickel		6	$219.60
	L-7332-ORB	Oil Rubbed Bronze		6	$246.10
	L-7372	Chrome	• Two-Handle Bathroom Widespread Faucet • Lever Handles • Rigid C-Style Spout • 4-9/16" Reach, 1-7/8" From Deck to Aerator • Ceramic Disc Cartridges • 3-Hole 4" to 16" Installation • Brass Pop-Up Drain Assembly • With 1.2 GPM Flow Rate • Easy-Install Mounting Nut	6	$185.00
	L-7372-BN	PVD Brushed Nickel		6	$235.10
	L-7372-ORB	Oil Rubbed Bronze		6	$252.00

ACCENT

PRESSURE BALANCE TRIM SETS

	MODEL#	FINISH	DESCRIPTION	CASE	PRICE
	T-2340	Chrome	• Single-Handle Tub & Shower Trim Set • Lever Handle • Ceramic Disc Cartridge With Temperature Limit Cap • Three Function 2-1/2" Pulsating Showerhead, Arm & Flange • Combo 1/2" IPS/Slip-On Diverter Tub Spout • With 1.75 GPM Flow Rate • For Use With V-2300B or V-2400B Series Valves – Valves Not Included	12	$108.90
	T-2340-BN	PVD Brushed Nickel		12	$146.90
	T-2340-ORB	Oil Rubbed Bronze		12	$145.80
	T-2340-MZ	Moroccan Bronze		12	$169.50
	T-2342	Chrome	• Single-Handle Shower Trim Set • Lever Handle • Ceramic Disc Cartridge With Temperature Limit Cap • Three Function 2-1/2" Pulsating Showerhead, Arm & Flange • With 1.75 GPM Flow Rate • For Use With V-2300B or V-2400B Series Valves – Valves Not Included	12	$91.80
	T-2342-BN	PVD Brushed Nickel		12	$122.70
	T-2342-ORB	Oil Rubbed Bronze		12	$122.80
	T-2342-MZ	Moroccan Bronze		12	$140.70
	T-2350	Chrome	• Single-Handle Tub & Shower Trim Set • Lever Handle • Ceramic Disc Cartridge With Temperature Limit Cap • Four-Function 3-3/8" Showerhead, Arm & Flange • Combo 1/2" IPS/Slip-On Diverter Tub Spout With Escutcheon • With 1.75 GPM Flow Rate • For Use With V-2300B or V-2400B Series Valves – Valves Not Included	12	$111.20
	T-2350-BN	PVD Brushed Nickel		12	$158.30
	T-2351	Chrome	• Single-Handle Tub Trim Set • Lever Handle • Ceramic Disc Cartridge With Temperature Limit Cap • Combo 1/2" IPS/Slip-On Tub Spout With Escutcheon • For Use With V-2300B or V-2400B Series Valves – Valves Not Included	12	$74.40

ACCENT

PRESSURE BALANCE TRIM SETS

	MODEL#	FINISH	DESCRIPTION	CASE	PRICE
	P-2240T	Chrome	• Single-Handle Diverter Trim Set • Lever Handle • Diverter Valve Faceplate • Diverter Valve Sleeve • For Use With P-2240B Valve – Valve Not Included	10	$28.10
	P-2240T-BN	PVD Brushed Nickel		10	$50.40
	P-2240T-ORB	Oil Rubbed Bronze		10	$69.80
	T-2352	Chrome	• Single-Handle Shower Trim Set • Lever Handle • Ceramic Disc Cartridge With Temperature Limit Cap • Four-Function 3-3/8" Showerhead, Arm & Flange • With 1.75 GPM Flow Rate • For Use With V-2300B or V-2400B Series Valves – Valves Not Included	12	$89.40
	T-2352-BN	PVD Brushed Nickel		12	$121.90
	T-2353	Chrome	• Single-Handle Tub & Shower Trim Set • Lever Handle • Ceramic Disc Cartridge With Temperature Limit Cap • Four-Function 3-3/8" Showerhead, Arm & Flange • Extended Combo 1/2" IPS/Slip-On Diverter Tub Spout With Escutcheon • With 1.75 GPM Flow Rate • For Use With V-2300B or V-2400B Series Valves – Valves Not Included	12	$123.10
	T-2353-BN	PVD Brushed Nickel		12	$165.00
	T-2354	Chrome	• Single-Handle Tub Trim Set • Lever Handle • Ceramic Disc Cartridge With Temperature Limit Cap • Extended Combo 1/2" IPS/Slip-On Tub Spout With Escutcheon • For Use With V-2300B or V-2400B Series Valves – Valves Not Included	12	$85.80
	T-2354-BN	PVD Brushed Nickel		12	$112.60
	T-2343	Chrome	• Single-Handle Valve Trim Set • Lever Handle • Ceramic Disc Cartridge With Temperature Limit Cap • For Use With V-2300B or V-2400B Series Valves – Valves Not Included	12	$56.90
	T-2343-BN	PVD Brushed Nickel		12	$75.70

ACCENT

PRESSURE BALANCE TRIM SETS

	MODEL#	FINISH	DESCRIPTION	CASE	PRICE
	T-2360	Chrome	• Single-Handle Tub & Shower Trim Set • Lever Handle • Ceramic Disc Cartridge With Temperature Limit Cap • Three Function 2-1/2" Pulsating Showerhead, Arm & Flange • Combo 1/2" IPS/Slip-On Diverter Tub Spout • With 1.75 GPM Flow Rate • For Use With V-2300B or V-2400B Series Valves – Valves Not Included	12	$109.60
	T-2360-BN	PVD Brushed Nickel		12	$149.30
	T-2362	Chrome	• Single-Handle Shower Trim Set • Lever Handle • Ceramic Disc Cartridge With Temperature Limit Cap • Three Function 2-1/2" Pulsating Showerhead, Arm & Flange • With 1.75 GPM Flow Rate • For Use With V-2300B or V-2400B Series Valves – Valves Not Included	12	$97.50
	T-2362-BN	PVD Brushed Nickel		12	$124.20
	T-2363	Chrome	• Single-Handle Valve Trim Set • Lever Handle • Ceramic Disc Cartridge With Temperature Limit Cap • For Use With V-2300B or V-2400B Series Valves – Valves Not Included	12	$62.50

ACCENT

TWO & THREE HANDLE TUB & SHOWER SETS

	MODEL#	FINISH	DESCRIPTION	CASE	PRICE
	P-3250	Chrome	• Three-Handle Tub & Shower Set • Lever Handles • 1/2” IPS Female Inlets • Washerless Cartridge Operation • Single-Function 2-1/4” Standard Showerhead, Arm & Flange • 1/2” IPS Tub Spout • With 1.5 GPM Flow Rate • 8” Cast-Brass Valve – Body Included	6	$159.70
	P-3250-BN	PVD Brushed Nickel		6	$212.20
	P-1250	Chrome	• Two-Handle Tub & Shower Set • Lever Handles • Built-in Transfer Valve • 1/2” IPS Female Inlets • Washerless Cartridge Operation • Single-Function 2-11/16” Standard Showerhead, 1.5 GPM, Arm & Flange • 1/2” IPS Diverter Tub Spout • With 1.5 GPM Flow Rate • 8" Cast-Brass Valve – Body Included	12	$141.70
	P-1250-BN	PVD Brushed Nickel		12	$196.90

ACCENT

HANDHELD SHOWER SETS

	MODEL#	FINISH	DESCRIPTION	CASE	PRICE
	P-4420	Chrome	• Handheld Shower Set • Three-Function Handheld Showerhead With Non-Positive/Shut Off • 24" Slide Bar With Mounts • 60" Stainless-Steel Flex Hose • Shower Arm 2-Way Diverter • Divert Water to Showerhead or Handheld Showerhead • With 1.75 GPM Flow Rate	12	$157.20
	P-4420-BN	PVD Brushed Nickel		12	$273.20
	P-4430	Chrome	• Handheld Shower Set • Three-Function Handheld Showerhead With Non-Positive/Shut Off • 24" Slide Bar With Mounts • 60" Stainless-Steel Flex Hose • Brass Drop Ell With Vacuum Breaker • With 1.75 GPM Flow Rate • Valve Sold Separately	12	$152.80
	P-4430-BN	PVD Brushed Nickel		12	$263.20
	P-4430-MB NEW	Matte Black		12	$279.76
	P-4430-ORB	Oil Rubbed Bronze		12	$292.50
	P-4430-MZ	Moroccan Bronze		12	$304.60
	P-4430-E1.5	Chrome	• With 1.5 GPM Flow Rate • Valve Sold Separately	12	$151.40
	P-4430-E1.5-BN	PVD Brushed Nickel		12	$258.30
	P-4440	Chrome	• Handheld Shower Set • Three-Function Handheld Showerhead With Non-Positive/Shut Off • 24" Grab/Slide Bar With Mounts • 60" Stainless-Steel Flex Hose • Brass Drop Ell With Vacuum Breaker • With 1.75 GPM Flow Rate • Valve Sold Separately	6	$179.40
	P-4440-BN	PVD Brushed Nickel		6	$276.70

ACCENT

ROMAN TUB TRIM SETS

		MODEL#	FINISH	DESCRIPTION	CASE	PRICE
	♿	**P-1131T**	Chrome	• Two-Handle Roman Tub Trim Set • Lever Handles • C-Style Rigid Spout • 7-1/2" Reach • 3-Hole 8" to 16" Installation • Trim Only, P-1131B Valve Required	6	$174.80
		P-1131T-BN	PVD Brushed Nickel		6	$215.70
		P-1131T-ORB	Oil Rubbed Bronze		6	$232.60
		P-1131T-MZ	Moroccan Bronze		6	$253.90
	♿	**P-1141T**	Chrome	• Two-Handle Roman Tub Trim Set • Lever Handles • C-Style Rigid Spout • 7-1/2" Reach • 3-Hole 8" to 16" Installation • Trim Only, P-1131B Valve Required	6	$178.50
		P-1141T-BN	PVD Brushed Nickel		6	$212.20
		P-1141T-MB	Matte Black		6	$215.40

ELITE

SINGLE HANDLE PULLOUT KITCHEN FAUCETS

MODEL#	FINISH	DESCRIPTION	CASE	PRICE
K-5030	Chrome	• Single-Handle Pull-Out Kitchen Faucet • Metal Lever Handle • Pull-Out Head With 2 Spray Patterns Swivel 180 Degree With Quick-Connect Spray Head Hose • 8-3/4" Reach, 5-3/16" From Deck to Aerator • Ceramic Disc Cartridge With Temperature Limit Cap • 1- or 3-Hole 8" Installation, Deck Cover Plate Included • Ball-Joint Swivel Spray Head • Easy-Install 30" Flex Supply Lines With 3/8" Connections • With 1.5 GPM Flow Rate	6	$181.70
K-5030-BN	PVD Brushed Nickel		6	$224.60
K-5030-ORB	Oil Rubbed Bronze		6	$230.90

SINGLE HANDLE KITCHEN FAUCETS

MODEL#	FINISH	DESCRIPTION	CASE	PRICE
K-4160	Chrome	• Single-Handle Kitchen Faucet • Metal Lever Handle • 360 Degree Swivel Spout • 7-15/16" Reach, 4-3/4" From Deck to Aerator • Stainless-Steel Ball Operation • 3-Hole 8" Installation • With 1.5 GPM Flow Rate	12	$84.20
K-4160-BN	PVD Brushed Nickel		12	$120.40
K-4160-ORB	Oil Rubbed Bronze		12	$126.70
K-4160B	Chrome	• Builder Tract Pack	12	$85.70
K-4160B-BN	PVD Brushed Nickel		12	$117.60
K-4160H	Chrome	• Easy-Install 30" Flex Supply Lines With 3/8" Connections	12	$97.80

MODEL#	FINISH	DESCRIPTION	CASE	PRICE
K-4161	Chrome	• Single-Handle Kitchen Faucet • Metal Lever Handle • 360 Degree Swivel Spout • 7-15/16" Reach, 4-3/4" From Deck to Aerator • Stainless-Steel Ball Operation • 4-Hole 8" Installation • Side-Spray Assembly With Quick-Connect Spray Head Hose • With 1.5 GPM Flow Rate	12	$101.90
K-4161-BN	PVD Brushed Nickel		12	$132.30
K-4161-ORB	Oil Rubbed Bronze		12	$132.20
K-4161B	Chrome	• Builder Tract Pack	12	$103.40
K-4161B-BN	PVD Brushed Nickel		12	$131.30
K-4161H	Chrome	• Easy-Install 30" Flex Supply Lines With 3/8" Connections	12	$113.20
K-4161H-BN	PVD Brushed Nickel		12	$141.70

MODEL#	FINISH	DESCRIPTION	CASE	PRICE
K-4162	Chrome	• Single-Handle Kitchen Faucet • Metal Lever Handle • 360 Degree Swivel Spout • 7-15/16" Reach, 4-3/4" From Deck to Aerator • Stainless-Steel Ball Operation • 4-Hole 8" Installation • Side-Spray Assembly With Quick-Connect Spray Head Hose • With 1.5 GPM Flow Rate	12	$111.00
K-4162-BN	PVD Brushed Nickel		12	$143.60
K-4162B	Chrome	• Builder Tract Pack	12	$107.20
K-4162H	Chrome	• Easy-Install 30" Flex Supply Lines With 3/8" Connections	12	$122.10

ELITE

SINGLE HANDLE KITCHEN FAUCETS

	MODEL#	FINISH	DESCRIPTION	CASE	PRICE
	K-4163	Chrome	· Single-Handle Kitchen Faucet · Metal Lever Handle · 360 Degree Swivel Spout · 7-15/16" Reach, 4-3/4" From Deck to Aerator · Stainless-Steel Ball Operation · 3-Hole 8" Installation · Side-Spray Assembly on Deck With Quick-Connect Spray Head Hose · With 1.5 GPM Flow Rate	12	$102.30
	K-4164	Chrome	· Single-Handle Kitchen Faucet · Metal Lever Handle · 360 Degree Swivel Spout · 7-15/16" Reach, 4-3/4" From Deck to Aerator · Stainless-Steel Ball Operation · 3-Hole 8" Installation · Side-Spray Assembly on Deck With Quick-Connect Spray Head Hose · With 1.5 GPM Flow Rate	12	$113.80
	K-4170	Chrome	· Single-Handle Kitchen Faucet · Metal Loop Handle · 360 Degree Swivel Spout · 7-15/16" Reach, 4-3/4" From Deck to Aerator · Stainless-Steel Ball Operation · 3-Hole 8" Installation · With 1.5 GPM Flow Rate	12	$84.40
	K-4170-BN	PVD Brushed Nickel		12	$108.30
	K-4171	Chrome	· Single-Handle Kitchen Faucet · Metal Loop Handle · 360 Degree Swivel Spout · 7-15/16" Reach, 4-3/4" From Deck to Aerator · Stainless-Steel Ball Operation · 4-Hole 8" Installation · Side-Spray Assembly With Quick-Connect Spray Head Hose	12	$98.50

ELITE

TWO HANDLE KITCHEN FAUCETS

	MODEL#	FINISH	DESCRIPTION	CASE	PRICE
	K-5120	Chrome	• Two-Handle Kitchen Faucet • Acrylic Round Handles • 360 Degree Swivel Spout • 7-9/16" Reach, 4-5/8" From Deck to Aerator • Washerless Cartridge Operation • 3-Hole 8" Installation • With 1.5 GPM Flow Rate	12	$75.00
	K-5121	Chrome	• Two-Handle Kitchen Faucet • Acrylic Round Handles • 360 Degree Swivel Spout • 7-9/16" Reach, 4-5/8" From Deck to Aerator • Washerless Cartridge Operation • 4-Hole 8" Installation • Side-Spray Assembly With Quick-Connect Spray Head Hose • With 1.5 GPM Flow Rate	12	$85.40
	K-5130	Chrome	• Two-Handle Kitchen Faucet • Mini Blade Handles • 360 Degree Swivel Spout • 7-9/16" Reach, 4-5/8" From Deck to Aerator • Washerless Cartridge Operation • 3-Hole 8" Installation • With 1.5 GPM Flow Rate	12	$78.40
	K-5131	Chrome	• Two-Handle Kitchen Faucet • Mini Blade Handles • 360 Degree Swivel Spout • 7-9/16" Reach, 4-5/8" From Deck to Aerator • Washerless Cartridge Operation • 4-Hole 8" Installation • Side-Spray Assembly With Quick-Connect Spray Head Hose • With 1.5 GPM Flow Rate	12	$88.20
	K-5150	Chrome	• Two-Handle Kitchen Faucet • ADA Wrist-Blade Handles • 360 Degree Swivel Spout • 7-9/16" Reach, 4-5/8" From Deck to Aerator • Washerless Cartridge Operation • 3-Hole 8" Installation • With 1.5 GPM Flow Rate	12	$84.40
	K-5160	Chrome	• Two-Handle Kitchen Faucet • Lever Handles • 360 Degree Swivel Spout • 7-9/16" Reach, 4-5/8" From Deck to Aerator • Washerless Cartridge Operation • 3-Hole 8" Installation • With 1.5 GPM Flow Rate	12	$82.70

ELITE

TWO HANDLE KITCHEN FAUCETS

	MODEL#	FINISH	DESCRIPTION	CASE	PRICE
	K-5161	Chrome	• Two-Handle Kitchen Faucet • Lever Handles • 360 Degree Swivel Spout • 7-9/16" Reach, 4-5/8" From Deck to Aerator • Washerless Cartridge Operation • 4-Hole 8" Installation • Side-Spray Assembly With Quick-Connect Spray Head Hose • With 1.5 GPM Flow Rate	12	$93.60
	K-5170	Chrome	• Two-Handle Kitchen Faucet • Lever Handles • 360 Degree Swivel Spout • 7-9/16" Reach, 4-5/8" From Deck to Aerator • Washerless Cartridge Operation • 3-Hole 8" Installation • With 1.5 GPM Flow Rate	12	$89.60
	K-5171	Chrome	• Two-Handle Kitchen Faucet • Lever Handles • 360 Degree Swivel Spout • 7-9/16" Reach, 4-5/8" From Deck to Aerator • Washerless Cartridge Operation • 4-Hole 8" Installation • Side-Spray Assembly With Quick-Connect Spray Head Hose • With 1.5 GPM Flow Rate	12	$96.90
	K-5270	Chrome	• Two-Handle Kitchen Faucet • Lever Handles With White & Chrome Inserts • High-Arc Spout Swivel 360° • 6-3/4" Reach, 9-13/16" From Deck to Aerator • Washerless Cartridge Operation • 3-Hole 8" Installation • With 1.5 GPM Flow Rate	6	$84.30
	K-5271	Chrome	• Two-Handle Kitchen Faucet • Lever Handles With White & Chrome Inserts • High-Arc Spout Swivel 360° • 6-3/4" Reach, 9-13/16" From Deck to Aerator • Washerless Cartridge Operation • 4-Hole 8" Installation • Side-Spray Assembly • With 1.5 GPM Flow Rate • Quick-Connect Spray Head Hose	6	$94.80

ELITE

TWO HANDLE BAR FAUCETS

	MODEL#	FINISH	DESCRIPTION	CASE	PRICE
	B-8170	Chrome	• Two-Handle Bar Faucet • ADA Wrist-Blade Handles • Gooseneck 360 Degree Swivel Spout • 5-1/4" Reach, 5-5/8" From Deck to Aerator • Washerless Cartridge Operation • 2- or 3-Hole 4" Installation • With 1.5 GPM Flow Rate	12	$79.40
	B-8171	Chrome	• Two-Handle Bar Faucet • Mini Blade Handles • Gooseneck 360 Degree Swivel Spout • 5-1/4" Reach, 5-5/8" From Deck to Aerator • Washerless Cartridge Operation • 2- or 3-Hole 4" Installation • With 1.5 GPM Flow Rate	12	$66.80
	B-8180	Chrome	• Two-Handle Bar Faucet • ADA Wrist-Blade Handles • Gooseneck 360 Degree Swivel Spout • 3-9/16" Reach, 6-15/16" From Deck to Aerator • Washerless Cartridge Operation • 2- or 3-Hole 4" Installation • With 1.5 GPM Flow Rate	12	$85.80
	B-8181	Chrome	• Two-Handle Bar Faucet • Mini Blade Handles • Gooseneck 360 Degree Swivel Spout • 3-9/16" Reach, 6-15/16" From Deck to Aerator • Washerless Cartridge Operation • 2- or 3-Hole 4" Installation • With 1.5 GPM Flow Rate	12	$72.90
	B-8190	Chrome	• Two-Handle Bar & Laundry Faucet • ADA Wrist-Blade Handles • Hi-Tubular 360 Degree Swivel Spout • 5-1/2" Reach, 5-13/16" From Deck to Aerator • Washerless Cartridge Operation • 2- or 3-Hole 4" Installation • With 1.5 GPM Flow Rate	12	$82.40
	B-8191	Chrome	• Two-Handle Bar & Laundry Faucet • Mini Blade Handles • Hi-Tubular 360 Degree Swivel Spout • 5-1/2" Reach, 5-13/16" From Deck to Aerator • Washerless Cartridge Operation • 2- or 3-Hole 4" Installation • With 1.5 GPM Flow Rate	12	$69.50

ELITE

SINGLE HANDLE BATHROOM FAUCETS

	MODEL#	FINISH	DESCRIPTION	CASE	PRICE
	L-6160	Chrome	• Single-Handle Bathroom Faucet • Metal Lever Handle • 3-7/8" Reach, 1-3/4" From Deck to Aerator • Stainless-Steel Ball Operation • 3-Hole 4" Installation • 50/50 Pop-Up Drain Assembly • With 1.2 GPM Flow Rate	12	$84.80
	L-6160-BN	PVD Brushed Nickel		12	$108.50
	L-6160-ORB	Oil Rubbed Bronze		12	$117.00
	L-6160-E0.5 NEW	Chrome	• With 0.5 GPM Flow Rate	12	$87.00
	L-6160H	Chrome	• Easy-Install 18" Flex Supply Lines With 3/8" Connections	12	$85.90
	L-6160H-BN	PVD Brushed Nickel		12	$113.10
	L-6160B	Chrome	• Builder Tract Pack	12	$85.80
	L-6160B-BN	PVD Brushed Nickel		12	$106.20
	L-6160B-E0.5	Chrome	• With 0.5 GPM Flow Rate • Builder Tract Pack	12	$85.70
	L-6161	Chrome	• Single-Handle Bathroom Faucet • Metal Lever Handle • 3-7/8" Reach, 1-3/4" From Deck to Aerator • Stainless-Steel Ball Operation • 3-Hole 4" Installation • With 1.2 GPM Flow Rate	12	$72.60
	L-6161H	Chrome	• Easy-Install 18" Flex Supply Lines With 3/8" Connections	12	$74.40
	L-6161-E0.35	Chrome	• With 0.35 GPM Flow Rate	12	$74.70
	L-6161G	Chrome	• Single-Handle Bathroom Faucet • Metal Lever Handle • 3-7/8" Reach, 1-3/4" From Deck to Aerator • Stainless-Steel Ball Operation • 3-Hole 4" Installation • Brass Grid Strainer Drain Assembly • With 1.2 GPM Flow Rate	12	$87.30
	L-6161G-E0.35	Chrome	• With 0.35 GPM Flow Rate	12	$90.10
	L-6162	Chrome	• Single-Handle Bathroom Faucet • Metal Lever Handle • 3-7/8" Reach, 1-3/4" From Deck to Aerator • Stainless-Steel Ball Operation • 3-Hole 4" Installation • Brass Pop-Up Drain Assembly • With 1.2 GPM Flow Rate	12	$91.40
	L-6162-BN	PVD Brushed Nickel		12	$121.60
	L-6162-ORB	Oil Rubbed Bronze		12	$125.00
	L-6162B	Chrome	• Builder Tract Pack	12	$89.90
	L-6162H	Chrome	• Easy-Install 18" Flex Supply Lines With 3/8" Connections	12	$92.90

ELITE

SINGLE HANDLE BATHROOM FAUCETS

	MODEL#	FINISH	DESCRIPTION	CASE	PRICE
	L-6164	Chrome	• Single-Handle Bathroom Faucet • Metal Lever Handle • 4-5/8" Reach, 1-3/4" From Deck to Aerator • Stainless-Steel Ball Operation • 3-Hole 4" Installation • With Pop-Up Hole Cover • With 1.2 GPM Flow Rate	12	$70.40
	L-6165B	Chrome	• Single-Handle Bathroom Faucet • Metal Lever Handle • 3-7/8" Reach, 1-3/4" From Deck to Aerator • Stainless-Steel Ball Operation • 3-Hole 4" Installation • 50/50 Push-Down Drain With Overflow • With 1.2 GPM Flow Rate • Builder Tract Pack	12	$86.50
	L-6165B-BN	PVD Brushed Nickel		12	$103.60
	L-6170	Chrome	• Single-Handle Bathroom Faucet • Metal Loop Handle • 3-7/8" Reach, 1-3/4" From Deck to Aerator • Stainless-Steel Ball Operation • 3-Hole 4" Installation • 50/50 Pop-Up Drain Assembly • With 1.2 GPM Flow Rate	12	$87.30
	L-6171 NEW	Chrome	• Single-Handle Lavatory Faucet • Metal Loop Handle • 3-7/8" Reach, 1-3/4" From Deck to Aerator • Stainless Steel Ball Operation • 3-Hole 4" Installation • No Pop-Up Hole • With 1.2 GPM Flow Rate	12	$72.60
	L-6172	Chrome	• Single-Handle Bathroom Faucet • Metal Loop Handle • 3-7/8" Reach, 1-3/4" From Deck to Aerator • Stainless-Steel Ball Operation • 3-Hole 4" Installation • Brass Pop-Up Drain Assembly • With 1.2 GPM Flow Rate	12	$87.10
	L-6172-BN	PVD Brushed Nickel		12	$115.90

ELITE

SINGLE HANDLE BATHROOM FAUCETS

	MODEL#	FINISH	DESCRIPTION	CASE	PRICE
	L-6174	Chrome	• Single-Handle Bathroom Faucet • Metal Loop Handle • 3-7/8" Reach, 1-3/4" From Deck to Aerator • Stainless-Steel Ball Operation • 3-Hole 4" Installation • With Pop-Up Hole Cover • With 1.2 GPM Flow Rate	12	$71.10
	L-6260H	Chrome	• Single-Handle Bathroom Faucet • Metal Lever Handle • 4-3/4" Reach, 2" From Deck to Aerator • Stainless-Steel Ball Operation • 3-Hole 4" Installation • 50/50 Pop-Up Drain Assembly • Easy-Install 18" Flex Supply Lines With 3/8" Connections • With 1.2 GPM Flow Rate	12	$106.90
	L-6260H-BN	PVD Brushed Nickel		12	$144.90
	L-6260BH	Chrome	• Builder Tract Pack	12	$107.10
	L-6260BH-BN	PVD Brushed Nickel		12	$145.50
	L-6262H	Chrome	• Single-Handle Bathroom Faucet • Metal Lever Handle • 4-3/4" Reach, 2" From Deck to Aerator • Stainless-Steel Ball Operation • 3-Hole 4" Installation • Brass Pop-Up Drain Assembly • Easy-Install 18" Flex Supply Lines With 3/8" Connections • With 1.2 GPM Flow Rate	12	$110.30
	L-6262H-BN	PVD Brushed Nickel		12	$149.30
	L-6262BH	Chrome	• Builder Tract Pack	12	$109.70

ELITE

TWO HANDLE BATHROOM FAUCETS

	MODEL#	FINISH	DESCRIPTION	CASE	PRICE
	L-7220	Chrome	• Two-Handle Bathroom Faucet • Acrylic Round Handles • 3-5/8" Reach, 1-1/2" From Deck to Aerator • Washerless Cartridge Operation • 3-Hole 4" Installation • 50/50 Pop-Up Drain Assembly • With 1.2 GPM Flow Rate	12	$64.10
	L-7221	Chrome	• Two-Handle Bathroom Faucet • Acrylic Round Handles • 3-5/8" Reach, 1-1/2" From Deck to Aerator • Washerless Cartridge Operation • 3-Hole 4" Installation • With 1.2 GPM Flow Rate	12	$51.90
	L-7222	Chrome	• Two-Handle Bathroom Faucet • Acrylic Round Handles • 3-5/8" Reach, 1-1/2" From Deck to Aerator • Washerless Cartridge Operation • 3-Hole 4" Installation • Brass Pop-Up Drain Assembly • With 1.2 GPM Flow Rate	12	$73.10
	L-7290	Chrome	• Two-Handle Bathroom Faucet • Mini Blade Handles • 3-5/8" Reach, 1-1/2" From Deck to Aerator • Washerless Cartridge Operation • 3-Hole 4" Installation • 50/50 Pop-Up Drain Assembly • With 1.2 GPM Flow Rate	12	$68.20
	L-7291	Chrome	• Two-Handle Bathroom Faucet • Mini Blade Handles • 3-5/8" Reach, 1-1/2" From Deck to Aerator • Washerless Cartridge Operation • 3-Hole 4" Installation • With 1.2 GPM Flow Rate	12	$55.30

ELITE

TWO HANDLE BATHROOM FAUCETS

	MODEL#	FINISH	DESCRIPTION	CASE	PRICE
	L-7292	Chrome	• Two-Handle Bathroom Faucet • Mini Blade Handles • 3-5/8" Reach, 1-1/2" From Deck to Aerator • Washerless Cartridge Operation • 3-Hole 4" Installation • Brass Pop-Up Drain Assembly • With 1.2 GPM Flow Rate	12	$76.90
	L-7251	Chrome	• Two-Handle Bathroom Faucet • ADA Wrist-Blade Handles • 3-5/8" Reach, 1-1/2" From Deck to Aerator • Washerless Cartridge Operation • 3-Hole 4" Installation • With 1.2 GPM Flow Rate	12	$68.10
	L-7251G	Chrome	• Two-Handle Bathroom Faucet • ADA Wrist-Blade Handles • 3-5/8" Reach, 1-1/2" From Deck to Aerator • Washerless Cartridge Operation • 3-Hole 4" Installation • Brass Grid Strainer Drain Assembly • With 1.2 GPM Flow Rate	12	$84.40

ELITE

PRESSURE BALANCE TRIM SETS

	MODEL#	FINISH	DESCRIPTION	CASE	PRICE
	T-2300	Chrome	• Single-Handle Tub/Shower Trim Set • Metal Lever Handle • Ceramic Disc Cartridge With Temperature Limit Cap • Single-Function 2-11/16" Standard Showerhead, 1.5 GPM Flow Rate, Arm & Flange • Combo 1/2" IPS/Slip-On Diverter Tub Spout • For Use With V-2300B or V-2400B Series Valves – Valves Not Included	12	$93.40
	T-2300-BN	PVD Brushed Nickel		12	$131.10
	T-2300-ORB	Oil Rubbed Bronze		12	$135.50
	T-2300-MZ	Moroccan Bronze		12	$140.20
	T-2300-LS NEW	Chrome	• Single-Handle Tub/Shower Trim Set • Metal Lever Handle • Ceramic Disc Cartridge With Temperature Limit Cap • Arm & Flange • Combo 1/2" IPS/Slip-On Diverter Tub Spout • For Use With V-2300B Or V-2400B Series Valves – Valve Not Included	12	$90.40
	TD-2300-ADA	Chrome	• Single-Handle Tub & Shower Trim Set With Handheld • Metal Lever Handles – Faceplate • Single-Function 2-11/16" Standard Showerhead – 1.5 GPM Flow Rate, Arm & Flange • Combo 1/2" IPS/Slip-On Diverter Tub Spout • For Use With V-2500B Valve – Valve Not Included • Three-Function Handheld Showerhead With Non-Positive/Shut Off – 1.75 GPM With 60" Stainless-Steel Flex Hose • 24" Grab/Slide Bar and Brass Drop Ell With Vacuum Breaker	6	$230.00
	TD-2300-ADA-BN	PVD Brushed Nickel			$338.70
	TD-2300-ADA-MB	Matte Black			$358.50
	T-2310	Chrome	• Single-Handle Tub & Shower Trim Set • Metal Loop Handle • Ceramic Disc Cartridge With Temperature Limit Cap • Single-Function 2-11/16" Standard Showerhead, Arm & Flange • Combo 1/2" IPS/Slip-On Diverter Tub Spout • With 1.5 GPM Flow Rate • For Use With V-2300B or V-2400B Series Valves – Valves Not Included	12	$93.50
	T-2310-BN	PVD Brushed Nickel		12	$129.20
	T-2301	Chrome	• Single-Handle Tub Trim Set • Metal Lever Handle • Ceramic Disc Cartridge With Temperature Limit Cap • Combo 1/2" IPS/Slip-On Tub Spout • For Use With V-2300B or V-2400B Series Valves – Valves Not Included	12	$66.60
	T-2301-BN	PVD Brushed Nickel		12	$88.80
	T-2301-ORB	Oil Rubbed Bronze		12	$91.00

ELITE

PRESSURE BALANCE TRIM SETS

	MODEL#	FINISH	DESCRIPTION	CASE	PRICE
	T-2301-ADA	Chrome	• Single-Handle Tub Trim Set With Handheld • Metal Lever Handle • Ceramic Disc Cartridge With Temperature Limit Cap • Combo 1/2" IPS/Slip-On Diverter Tub Spout • For Use With V-2300B or V-2400B Series Valves – Valves Not Included • Three-Function Handheld Showerhead With Non-Positive/Shut Off – 1.75 GPM With 60" Stainless-Steel Flex Hose • 24" Grab/Slide Bar and Brass Drop Ell With Vacuum Breaker	- - -	$276.10
	T-2302	Chrome	• Single-Handle Shower Trim Set • Metal Lever Handle • Ceramic Disc Cartridge With Temperature Limit Cap • Single-Function 2-11/16" Standard Showerhead, Arm & Flange • With 1.5 GPM Flow Rate • For Use With V-2300B or V-2400B Series Valves – Valves Not Included	12	$77.70
	T-2302-BN	PVD Brushed Nickel		12	$108.60
	T-2302-ORB	Oil Rubbed Bronze		12	$108.90
	TD-2302-ADA	Chrome	• Single-Handle Shower Trim Set With Handheld • Metal Lever Handles – Faceplate • Single-Function 2-11/16" Standard Showerhead, Arm & Flange • With 1.5 GPM Flow Rate • For Use With V-2500B Valve – Valve Not Included • Three-Function Handheld Showerhead With Non-Positive/Shut Off – 1.75 GPM With 60" Stainless-Steel Flex Hose • 24" Grab/Slide Bar and Brass Drop Ell With Vacuum Breaker	6	$209.10
	TD-2302-ADA-BN	PVD Brushed Nickel			$320.40
	TD-2302-ADA-MB	Matte Black			$330.50
	T-2303	Chrome	• Single-Handle Valve Trim Set • Metal Lever Handle • Ceramic Disc Cartridge With Temperature Limit Cap • For Use With V-2300B or V-2400B Series Valves – Valves Not Included	12	$55.20
	T-2303-BN	PVD Brushed Nickel		12	$73.40
	T-2303-ORB	Oil Rubbed Bronze		12	$92.00
	T-2303-ADA	Chrome	• Single-Handle Valve Trim Set With Handheld • Metal Lever Handle • Ceramic Disc Cartridge With Temperature Limit Cap • For Use With V-2300B or V-2400B Series Valves – Valves Not Included • Three-Function Handheld Showerhead With Non-Positive/Shut Off – 1.75 GPM With 60" Stainless-Steel Flex Hose • 24" Grab/Slide Bar and Brass Drop Ell With Vacuum Breaker	4	$237.40
	T-2303-ADA-BN	PVD Brushed Nickel		4	$306.80

ELITE

PRESSURE BALANCE TRIM SETS

	MODEL#	FINISH	DESCRIPTION	CASE	PRICE
	T-2300-VC NEW	Chrome	• Single-Handle Tub/Shower Volume Control Trim Set • Metal Lever Handle – Faceplate • Volume and Temperature Control Ceramic Disc Cartridge With Temperature Limit Cap • Single-Function 2-11/16" Standard Showerhead, Arm & Flange • Combo 1/2" IPS/Slip-On Diverter Tub Spout • With 1.5 GPM Flow Rate • For Use With V-2300B or V-2400B Series Valves – Valves Not Included	12	$117.75
	T-2300-VC-BN NEW	PVD Brushed Nickel		12	$154.50
	T-2302-VC NEW	Polished Chrome	• Single-Handle Volume Control Shower Trim Set • Metal Lever Handle • Volume and Temperature Control Ceramic Disc Cartridge With Temperature Limit Cap • Single-Function 2-11/16" Standard Showerhead, Arm & Flange • With 1.5 GPM Flow Rate • For Use With V-2300B or V-2400B Series Valves – Valves Not Included	12	$101.75
	T-2302-VC-BN NEW	PVD Brushed Nickel		12	$132.00
	T-2306	Chrome	• Single-Handle Tub & Shower Trim Set • Metal Lever Handle • Ceramic Disc Cartridge With Temperature Limit Cap • Four-Function 3-3/8" Showerhead, Arm & Flange • Combo 1/2" IPS/Slip-On Diverter Tub Spout • With 1.75 GPM Flow Rate • For Use With V-2300B or V-2400B Series Valves – Valves Not Included	12	$106.10
	T-2306-BN	PVD Brushed Nickel		12	$144.50
	T-2307	Chrome	• Single-Handle Shower Trim Set • Metal Lever Handle • Ceramic Disc Cartridge With Temperature Limit Cap • Four-Function 3-3/8" Showerhead, Arm & Flange • With 1.75 GPM Flow Rate • For Use With V-2300B or V-2400B Series Valves – Valves Not Included	12	$90.90
	T-2307-BN	PVD Brushed Nickel		12	$118.80
	T-2312	Chrome	• Single-Handle Shower Trim Set • Metal Loop Handle • Ceramic Disc Cartridge With Temperature Limit Cap • Single-Function 2-11/16" Standard Showerhead, Arm & Flange • With 1.5 GPM Flow Rate • For Use With V-2300B or V-2400B Series Valves – Valves Not Included	12	$75.00

ELITE

SINGLE HANDLE TUB & SHOWER SETS

	MODEL#	FINISH	DESCRIPTION	CASE	PRICE
	P-2000	Chrome	• Single-Handle Tub & Shower Set • Metal Lever Handle • Faceplate • 1/2" IPS Female Inlets • Stainless-Steel Ball Operation • Single-Function 1-3/4" Showerhead, Arm & Flange • 1/2" IPS Diverter Tub Spout • With 1.75 GPM Flow Rate • Non-Pressure Balance Valve Included	12	$85.40
	P-2002	Chrome	• Single-Handle Shower Set • Metal Lever Handle • Faceplate • 1/2" IPS Female Inlets • Stainless-Steel Ball Operation • Single-Function 1-3/4" Showerhead, Arm & Flange • With 1.75 GPM Flow Rate • Non-Pressure Balance Valve Included	12	$82.30
	P-2002-BN	PVD Brushed Nickel		12	$125.00t
	VT-2300-RP NEW	Polished Chrome	• Single-Handle Tub & Shower Trim Set • Metal Lever Handle – Oval Faceplate • Pressure Balance Ceramic Disc Cartridge With Temperature Limit Cap • Single-Function 2-11/16" Standard Showerhead, 1.5 GPM Flow Rate, Arm & Flange • Combo 1/2" IPS/Slip-On Diverter Tub Spout • Combo CXC and IPS Inlet & Outlet • Brass Inlet Stops With Backflow Preventers • Stainless-Steel Mounting Bracket • Test Cap Allows Pressure Testing 150 PSI Max	6	$235.90
	VT-2302-RP NEW	Polished Chrome	• Single-Handle Tub & Shower Trim Set • Metal Lever Handle – Oval Faceplate • Ceramic Disc Cartridge With Temperature Limit Cap • Single-Function 2-11/16" Standard Showerhead, 1.5 GPM Flow Rate, Arm & Flange • Combo CXC and IPS Inlet & Outlet • Brass Inlet Stops With Backflow Preventers • Stainless-Steel Mounting Bracket • Test Cap Allows Pressure Testing 150 PSI Max • Square Mud Guard With Leveler – Allows Right Angle Cuts	6	$217.20

This is not a pressure balance valve. It may not meet local code.

ELITE

TWO & THREE HANDLE TUB & SHOWER SETS

		MODEL#	FINISH	DESCRIPTION	CASE	PRICE
	CA	P-1220	Chrome	• Two-Handle Tub & Shower Set • Acrylic Round Handles • Built-in Transfer Valve • 1/2" IPS Female Inlets • Compression Stem Operation • Single-Function 1-3/4" Showerhead, Arm & Flange • 1/2" IPS Diverter Tub Spout • With 1.75 GPM Flow Rate	12	$94.80
	CA	P-1222	Chrome	• Two-Handle Shower Set • Acrylic Round Handles • Built-in Transfer Valve • 1/2" IPS Female Inlets • Compression Stem Operation • Single-Function 1-3/4" Showerhead, Arm & Flange • With 1.75 GPM Flow Rate • 8" Cast-Brass Valve – Body Included	12	$91.10
	CA	P-1210	Chrome	• Two-Handle Tub & Shower Set • Metal Round Handles • Built-in Transfer Valve • 1/2" IPS Female Inlets • Compression Stem Operation • Single-Function 1-3/4" Showerhead, Arm & Flange • 1/2" IPS Diverter Tub Spout • With 1.75 GPM Flow Rate • 8" Cast-Brass Valve – Body Included	12	$98.10
	CA	P-1212	Chrome	• Two-Handle Shower Set • Metal Round Handles • Built-in Transfer Valve • 1/2" IPS Female Inlets • Compression Stem Operation • Single-Function 1-3/4" Showerhead, Arm & Flange • With 1.75 GPM Flow Rate • 8" Cast-Brass Valve – Body Included	12	$92.30

This is not a pressure balance valve. It may not meet local code.

ELITE

TWO & THREE HANDLE TUB & SHOWER SETS

	MODEL#	FINISH	DESCRIPTION	CASE	PRICE
	P-1230	Chrome	• Two-Handle Tub & Shower Set • Lever Handles • Built-in Transfer Valve • 1/2” IPS Female Inlets • Washerless Cartridge Operation • Single-Function 2-11/16” Standard Showerhead, 1.5 GPM, Arm & Flange • 1/2” IPS Diverter Tub Spout • With 1.5 GPM Flow Rate • 8" Cast-Brass Valve – Body Included	12	$133.50
	P-1230-BN	PVD Brushed Nickel		12	$173.70
	P-1231	Chrome	• Two-Handle Tub Set • Lever Handles • Built-in Transfer Valve • 1/2" IPS Female Inlets • Washerless Cartridge Operation • 1/2" IPS Tub Spout • 8" Cast-Brass Valve – Body Included	12	$115.90
	P-1232	Chrome	• Two-Handle Shower Set • Lever Handles • Built-in Transfer Valve • 1/2” IPS Female Inlets • Washerless Cartridge Operation • Single-Function 2-11/16” Standard Showerhead, 1.5 GPM, Arm & Flange • With 1.5 GPM Flow Rate • 8” Cast-Brass Valve – Body Included	12	$120.30
	P-1232-BN	PVD Brushed Nickel		12	$151.30
	P-1240	Chrome	• Two-Handle Tub & Shower Set • Acrylic Round Handles • Built-in Transfer Valve • 1/2” IPS Female Inlets • Washerless Cartridge Operation • Single-Function 2-11/16” Standard Showerhead, 1.5 GPM, Arm & Flange • 1/2” IPS Diverter Tub Spout • With 1.5 GPM Flow Rate	12	$126.90
	P-1242 NEW	Chrome	• Two-Handle Tub/Shower Set • Acrylic Handles • 1/2” IPS Inlets • Washerless Cartridge Operation • Showerhead, Arm & Flange • With 1.5 GPM Flow Rate	12	$119.08

This is not a pressure balance valve. It may not meet local code.

ELITE

TWO & THREE HANDLE TUB & SHOWER SETS

	MODEL#	FINISH	DESCRIPTION	CASE	PRICE
	P-3230	Chrome	• Three-Handle Tub & Shower Set • Lever Handles • 1/2" IPS Female Inlets • Washerless Cartridge Operation • Single-Function 2-1/4" Standard Showerhead, Arm & Flange • 1/2" IPS Tub Spout • With 1.5 GPM Flow Rate • 8" Cast-Brass Valve – Body Included	6	$155.10
	P-3230-BN	PVD Brushed Nickel		6	$205.70
	P-3240	Chrome	• Three-Handle Tub & Shower Set • Acrylic Round Handles • 1/2" IPS Female Inlets • Washerless Cartridge Operation • Single-Function 2-1/4" Standard Showerhead, Arm & Flange • 1/2" IPS Tub Spout • With 1.5 GPM Flow Rate • 8" Cast-Brass Valve – Body Included	12	$148.20
	P-3210	Chrome	• Three-Handle Tub & Shower Set • Metal Round Handles • 1/2" IPS Female Inlets • Compression Stem Operation • Single-Function 1-3/4" Showerhead, Arm & Flange • 1/2" IPS Tub Spout • With 1.75 GPM Flow Rate • 8" Cast-Brass Valve – Body Included	6	$130.10
	P-3220	Chrome	• Three-Handle Tub & Shower Set • Acrylic Round Handles • 1/2" IPS Female Inlets • Compression Stem Operation • Single-Function 1-3/4" Showerhead, Arm & Flange • 1/2" IPS Tub Spout • With 1.75 GPM Flow Rate • 8" Cast-Brass Valve – Body Included	6	$127.80

VALVES

PRESSURE BALANCE VALVES

	MODEL#	FINISH	DESCRIPTION	CASE	PRICE
	V-2300B	Rough Brass	• Single-Handle Tub & Shower Pressure-Balancing Valve • Combo CXC and IPS Inlet & Outlet • Pressure-Balancing Cartridge Ships With Trims • Brass Inlet Stops With Backflow Preventors • Stainless-Steel Mounting Bracket • Test Cap Allows Pressure Testing 150 PSI Max • Square Mud Guard With Leveler – Allows Right Angle Cuts • Thin- or Thick-Wall Mounting • Back-to-Back Installation	12	$72.70
	V-2300B-B	Rough Brass	• Builder Tract Pack	12	$68.50
	V-2300B-EP90D	Rough Brass	• Single-Handle Tub & Shower Pressure-Balancing Valve • Uponor PEX 90-Degree Down Inlet With Combo CXC & IPS Outlet • Pressure-Balancing Cartridge Ships With Trims • Brass Inlet Stops With Backflow Preventors • Stainless-Steel Mounting Bracket • Test Cap Allows Pressure Testing 150 PSI Max • Square Mud Guard With Leveler – Allows Right Angle Cuts • Thin- or Thick-Wall Mounting • Back-to-Back Installation	12	$85.60
	V-2300B-EP90U	Rough Brass	• Single-Handle Tub & Shower Pressure-Balancing Valve • Uponor PEX 90-Degree Up Inlet With Combo CXC & IPS Outlet • Pressure-Balancing Cartridge Ships With Trims • Brass Inlet Stops With Backflow Preventors • Stainless-Steel Mounting Bracket • Test Cap Allows Pressure Testing 150 PSI Max • Square Mud Guard With Leveler – Allows Right Angle Cuts • Thin- or Thick-Wall Mounting • Back-to-Back Installation	12	$85.60
	V-2301B	Rough Brass	• Single-Handle Tub & Shower Pressure-Balancing Valve • 1/2" PEX Inlet & Shower Outlet With Combo CXC & IPS Tub Outlet • Pressure-Balancing Cartridge Ships With Trims • Brass Inlet Stops With Backflow Preventors • Stainless-Steel Mounting Bracket • Test Cap Allows Pressure Testing 150 PSI Max • Square Mud Guard With Leveler – Allows Right Angle Cuts • Thin- or Thick-Wall Mounting • Back-to-Back Installation	12	$83.20
	V-2301B-B	Rough Brass	• Builder Tract Pack	12	$83.10
	V-2302B	Rough Brass	• Single-Handle Tub & Shower Pressure-Balancing Valve • 1/2" PEX Inlet & Shower Outlet With Combo CXC & IPS Tub Outlet • Pressure-Balancing Cartridge Ships With Trims • Brass Inlet Stops With Backflow Preventors • Stainless-Steel Mounting Bracket • Test Cap Allows Pressure Testing 150 PSI Max • Square Mud Guard With Leveler – Allows Right Angle Cuts • Thin- or Thick-Wall Mounting • Back-to-Back Installation	12	$82.70
	V-2302B-B	Rough Brass	• Builder Tract Pack	12	$84.70

VALVES

PRESSURE BALANCE VALVES

	MODEL#	FINISH	DESCRIPTION	CASE	PRICE
	V-2303B	Rough Brass	• Single-Handle Tub & Shower Pressure-Balancing Valve • 1/2" CPVC Inlet With Combo CXC & IPS Outlet • Pressure-Balancing Cartridge Ships With Trims • Brass Inlet Stops With Backflow Preventors • Stainless-Steel Mounting Bracket • Test Cap Allows Pressure Testing 150 PSI Max • Square Mud Guard With Leveler – Allows Right Angle Cuts • Thin- or Thick-Wall Mounting • Back-to-Back Installation	12	$85.20
	V-2303B-B	Rough Brass	• Builder Tract Pack	12	$84.80
	V-2304B	Rough Brass	• Single-Handle Tub & Shower Pressure-Balancing Valve • 1/2" PEX Inlet & Shower Outlet With Copper Stub Tub Outlet • Pressure-Balancing Cartridge Ships With Trims • Brass Inlet Stops With Backflow Preventors • Stainless-Steel Mounting Bracket • Test Cap Allows Pressure Testing 150 PSI Max • Square Mud Guard With Leveler – Allows Right Angle Cuts • Thin- or Thick-Wall Mounting • Back-to-Back Installation	6	$104.60
	V-2304B-B	Rough Brass	• Builder Tract Pack	6	$104.50
	V-2305B	Rough Brass	• Single-Handle Tub & Shower Pressure-Balancing Valve • 1/2" PEX Inlet With Combo CXC & IPS Outlet • Pressure-Balancing Cartridge Ships With Trims • Brass Inlet Stops With Backflow Preventors • Stainless-Steel Mounting Bracket • Test Cap Allows Pressure Testing 150 PSI Max • Square Mud Guard With Leveler – Allows Right Angle Cuts • Thin- or Thick-Wall Mounting • Back-to-Back Installation	12	$75.60
	V-2305B-B	Rough Brass	• Builder Tract Pack	12	$76.00
	V-2306B	Rough Brass	• Single-Handle Tub & Shower Pressure-Balancing Valve • 1/2" PEX Inlet & Shower Outlet With Copper Stub Tub Outlet • Pressure-Balancing Cartridge Ships With Trims • Brass Inlet Stops With Backflow Preventors • Stainless-Steel Mounting Bracket • Test Cap Allows Pressure Testing 150 PSI Max • Square Mud Guard With Leveler – Allows Right Angle Cuts • Thin- or Thick-Wall Mounting • Back-to-Back Installation	6	$102.80
	V-2306B-B	Rough Brass	• Builder Tract Pack	6	$99.70
	V-2307B	Rough Brass	• Single-Handle Tub & Shower Pressure-Balancing Valve • 1/2" Uponor or Cold-Expansion PEX Inlet With Combo CXC & IPS Outlet • Pressure-Balancing Cartridge Ships With Trims • Brass Inlet Stops With Backflow Preventors • Stainless-Steel Mounting Bracket • Test Cap Allows Pressure Testing 150 PSI Max • Square Mud Guard With Leveler – Allows Right Angle Cuts • Thin- or Thick-Wall Mounting • Back-to-Back Installation	12	$74.50
	V-2307B-B	Rough Brass	• Builder Tract Pack	12	$73.90

VALVES

PRESSURE BALANCE VALVES

	MODEL#	FINISH	DESCRIPTION	CASE	PRICE
	V-2308B	Rough Brass	• Single-Handle Tub & Shower Pressure-Balancing Valve • 1/2" Uponor or Cold-Expansion PEX Inlet & Shower Outlet With Combo CXC & IPS Tub Outlet • Pressure-Balancing Cartridge Ships With Trims • Brass Inlet Stops With Backflow Preventors • Stainless-Steel Mounting Bracket • Test Cap Allows Pressure Testing 150 PSI Max • Square Mud Guard With Leveler – Allows Right Angle Cuts • Thin- or Thick-Wall Mounting • Back-to-Back Installation	12	$78.10
	V-2308B-B	Rough Brass	• Builder Tract Pack	12	$75.80
	V-2309B	Rough Brass	• Single-Handle Tub & Shower Pressure-Balancing Valve • 1/2" Uponor or Cold-Expansion PEX Inlet & Shower Outlet With Copper Stub Tub Outlet • Pressure-Balancing Cartridge Ships With Trims • Brass Inlet Stops With Backflow Preventors • Stainless-Steel Mounting Bracket • Test Cap Allows Pressure Testing 150 PSI Max • Square Mud Guard With Leveler – Allows Right Angle Cuts • Thin- or Thick-Wall Mounting • Back-to-Back Installation	6	$97.90
	V-2309B-B	Rough Brass	• Builder Tract Pack	6	$96.40
	V-2309B-EP90D	Rough Brass	• Single-Handle Tub & Shower Pressure-Balancing Valve • 1/2" Uponor or Cold-Expansion PEX 90-Degree Down Inlet & Shower Outlet With Copper Stub Tub Outlet • Pressure-Balancing Cartridge Ships With Trims • Brass Inlet Stops With Backflow Preventors • Stainless-Steel Mounting Bracket • Test Cap Allows Pressure Testing 150 PSI Max • Square Mud Guard With Leveler – Allows Right Angle Cuts • Thin- or Thick-Wall Mounting • Back-to-Back Installation	6	$109.60
	V-2309B-EP90U	Rough Brass	• Single-Handle Tub & Shower Pressure-Balancing Valve • 1/2" Uponor or Cold-Expansion PEX 90-Degree Up Inlet & Shower Outlet With Copper Stub Tub Outlet • Pressure-Balancing Cartridge Ships With Trims • Brass Inlet Stops With Backflow Preventors • Stainless-Steel Mounting Bracket • Test Cap Allows Pressure Testing 150 PSI Max • Square Mud Guard With Leveler – Allows Right Angle Cuts • Thin- or Thick-Wall Mounting • Back-to-Back Installation	6	$109.60
	V-2311B	Rough Brass	• Single-Handle Tub & Shower Pressure-Balancing Valve • 1/2" CPVC Inlet & Shower Outlet With Combo CXC & IPS Tub Outlet • Pressure-Balancing Cartridge Ships With Trims • Brass Inlet Stops With Backflow Preventors • Stainless-Steel Mounting Bracket • Test Cap Allows Pressure Testing 150 PSI Max • Square Mud Guard With Leveler – Allows Right Angle Cuts • Thin- or Thick-Wall Mounting • Back-to-Back Installation	12	$88.00
	V-2311B-B	Rough Brass	• Builder Tract Pack	12	$86.40

VALVES

PRESSURE BALANCE VALVES

	MODEL#	FINISH	DESCRIPTION	CASE	PRICE
	V-2312B-B	Rough Brass	• Single-Handle Tub & Shower Pressure-Balancing Valve • 1/2" PEX Inlet & Shower Outlet With Copper Stub Tub Outlet • Pressure-Balancing Cartridge Ships With Trims • Brass Inlet Stops With Backflow Preventors • Stainless-Steel Mounting Bracket • Test Cap Allows Pressure Testing 150 PSI Max • Square Mud Guard With Leveler – Allows Right Angle Cuts • Thin- or Thick-Wall Mounting • Back-to-Back Installation, Builder Tract Pack • Builder Tract Pack	6	$99.40
	V-2315B	Rough Brass	• Single Handle Tub/Shower Pressure Balancing Valve • 1/2" PEX Inlet & Shower Outlet With Copper Stub Tub Outlet • Pressure-Balancing Cartridge Ships With Trims • Brass Inlet Stops With Backflow Preventers • Stainless Steel Mounting Bracket • Test Cap Allows Pressure Testing 150 PSI Max • Square Mud Guard With Leveler – Allows Right Angle Cuts • Thin or Thick Wall Mounting • Back-to-Back Installation	12	$84.20
	V-2315B-B	Rough Brass	• Builder Tract Pack	12	$82.20
	V-2316B	Rough Brass	• Single-Handle Tub & Shower Pressure-Balancing Valve • 1/2" FIP Inlet & Outlet • Pressure-Balancing Cartridge Ships With Trims • Brass Inlet Stops With Backflow Preventors • Stainless-Steel Mounting Bracket • Test Cap Allows Pressure Testing 150 PSI Max • Square Mud Guard With Leveler – Allows Right Angle Cuts • Thin- or Thick-Wall Mounting • Back-to-Back Installation	12	$71.30
	V-2316B-B	Rough Brass	• Builder Tract Pack	12	$67.90
	V-2400B	Rough Brass	• Single-Handle Tub & Shower Pressure-Balancing Valve • Combo CXC and IPS Inlet & Outlet • Pressure-Balancing Cartridge Ships With Trims • Stainless-Steel Mounting Bracket • Test Cap Allows Pressure Testing 150 PSI Max • Square Mud Guard With Leveler – Allows Right Angle Cuts • Thin- or Thick-Wall Mounting • Back-to-Back Installation	12	$56.40
	V-2400B-B	Rough Brass	• Builder Tract Pack	12	$56.60
	V-2402B	Rough Brass	• Single-Handle Tub & Shower Pressure-Balancing Valve • 1/2" PEX Inlet & Shower Outlet With Combo CXC & IPS Tub Outlet • Pressure-Balancing Cartridge Ships With Trims • Stainless-Steel Mounting Bracket • Test Cap Allows Pressure Testing 150 PSI Max • Square Mud Guard With Leveler – Allows Right Angle Cuts • Thin- or Thick-Wall Mounting • Back-to-Back Installation	12	$75.80
	V-2402B-B	Rough Brass	• Builder Tract Pack	12	$77.00

VALVES

PRESSURE BALANCE VALVES

	MODEL#	FINISH	DESCRIPTION	CASE	PRICE
	V-2403B	Rough Brass	• Single-Handle Tub & Shower Pressure-Balancing Valve • 1/2" CPVC Inlet With Combo CXC & IPS Outlet • Pressure-Balancing Cartridge Ships With Trims • Stainless-Steel Mounting Bracket • Test Cap Allows Pressure Testing 150 PSI Max • Square Mud Guard With Leveler – Allows Right Angle Cuts • Thin- or Thick-Wall Mounting • Back-to-Back Installation	12	$66.80
	V-2403B-B	Rough Brass	• Builder Tract Pack	12	$66.10
	V-2404B	Rough Brass	• Single-Handle Tub & Shower Pressure-Balancing Valve • 1/2" PEX Inlet & Shower Outlet With Copper Stub Tub Outlet • Pressure-Balancing Cartridge Ships With Trims • Stainless-Steel Mounting Bracket • Test Cap Allows Pressure Testing 150 PSI Max • Square Mud Guard With Leveler – Allows Right Angle Cuts • Thin- or Thick-Wall Mounting • Back-to-Back Installation	6	$96.60
	V-2404B-B	Rough Brass	• Builder Tract Pack	6	$96.30
	V-2405B	Rough Brass	• Single-Handle Tub & Shower Pressure-Balancing Valve • 1/2" PEX Inlet With Combo CXC & IPS Outlet • Pressure-Balancing Cartridge Ships With Trims • Stainless-Steel Mounting Bracket • Test Cap Allows Pressure Testing 150 PSI Max • Square Mud Guard With Leveler – Allows Right Angle Cuts • Thin- or Thick-Wall Mounting • Back-to-Back Installation	12	$59.50
	V-2405B-B	Rough Brass	• Builder Tract Pack	12	$60.30
	V-2407B	Rough Brass	• Single-Handle Tub & Shower Pressure-Balancing Valve • 1/2" Uponor PEX Inlet With Combo CXC & IPS Outlet • Pressure-Balancing Cartridge Ships With Trims • Stainless-Steel Mounting Bracket • Test Cap Allows Pressure Testing 150 PSI Max • Square Mud Guard With Leveler – Allows Right Angle Cuts • Thin- or Thick-Wall Mounting • Back-to-Back Installation	12	$59.60
	V-2407B-B	Rough Brass	• Builder Tract Pack	12	$58.60
	V-2408B	Rough Brass	• Single-Handle Tub & Shower Pressure-Balancing Valve • 1/2" Uponor PEX Inlet & Shower Outlet With Combo CXC & IPS Tub Outlet • Pressure-Balancing Cartridge Ships With Trims • Stainless-Steel Mounting Bracket • Test Cap Allows Pressure Testing 150 PSI Max • Square Mud Guard With Leveler – Allows Right Angle Cuts • Thin- or Thick-Wall Mounting • Back-to-Back Installation	12	$69.50
	V-2408B-B	Rough Brass	• Builder Tract Pack	12	$67.50

VALVES

PRESSURE BALANCE VALVES

	MODEL#	FINISH	DESCRIPTION	CASE	PRICE
	V-2410B	Rough Brass	• Single-Handle Tub & Shower Pressure-Balancing Valve • 1/2" CPVC Inlet & Shower Outlet With Copper Stub Tub Outlet • Pressure-Balancing Cartridge Ships With Trims • Stainless-Steel Mounting Bracket • Test Cap Allows Pressure Testing 150 PSI Max • Square Mud Guard With Leveler – Allows Right Angle Cuts • Thin- or Thick-Wall Mounting • Back-to-Back Installation	6	$97.80
	V-2411B	Rough Brass	• Single-Handle Tub & Shower Pressure-Balancing Valve • 1/2" CPVC Inlet & Shower Outlet With Combo CXC & IPS Tub Outlet • Pressure-Balancing Cartridge Ships With Trims • Stainless-Steel Mounting Bracket • Test Cap Allows Pressure Testing 150 PSI Max • Square Mud Guard With Leveler – Allows Right Angle Cuts • Thin- or Thick-Wall Mounting • Back-to-Back Installation	12	$84.60
	V-2412B	Rough Brass	• Single-Handle Tub & Shower Pressure-Balancing Valve • 1/2" PEX Inlet & Shower Outlet With Copper Stub Tub Outlet • Pressure-Balancing Cartridge Ships With Trims • Stainless-Steel Mounting Bracket • Test Cap Allows Pressure Testing 150 PSI Max • Square Mud Guard With Leveler – Allows Right Angle Cuts • Thin- or Thick-Wall Mounting • Back-to-Back Installation	6	$92.10
	V-2415B	Rough Brass	• Single-Handle Tub & Shower Pressure-Balancing Valve • 1/2" PEX Inlet & Shower Outlet With Capped Combo CXC & IPS Tub Outlet • Pressure-Balancing Cartridge Ships With Trims • Stainless-Steel Mounting Bracket • Test Cap Allows Pressure Testing 150 PSI Max • Square Mud Guard With Leveler – Allows Right Angle Cuts • Thin- or Thick-Wall Mounting • Back-to-Back Installation	12	$68.30
	V-2416B	Rough Brass	• Single-Handle Tub & Shower Pressure-Balancing Valve • 1/2" FIP Inlet & Outlet • Pressure-Balancing Cartridge Ships With Trims • Stainless-Steel Mounting Bracket • Test Cap Allows Pressure Testing 150 PSI Max • Square Mud Guard With Leveler – Allows Right Angle Cuts • Thin- or Thick-Wall Mounting • Back-to-Back Installation	12	$54.70
	V-2416B-B	Rough Brass	• Builder Tract Pack	12	$54.20

VALVES

PRESSURE BALANCE VALVES

		MODEL#	FINISH	DESCRIPTION	CASE	PRICE
		V-2500B		• Single-Handle Tub & Shower Pressure-Balancing Valve With Built-In 2-Way Diverter • Combo CXC and IPS Inlet & Outlet • Pressure-Balancing Two-Way Diverter Cartridge • Brass Inlet Stops With Backflow Preventers • Stainless-Steel Mounting Bracket • Test Cap Allows Pressure Testing 150 PSI Max • Square Mud Guard With Leveler – Allows Right Angle Cuts • Thin- or Thick-Wall Mounting • Back-to-Back Installation	12	$131.60

ROMAN TUB SET VALVES

		MODEL#	FINISH	DESCRIPTION	CASE	PRICE
		P-1131B	Chrome	• Two-Handle Roman Tub Valve Set • 1/2” IPS or Sweat Connections • Quick-Mount Connector • Deck or Ledge Mount • Ceramic Disc Cartridges • 3-Hole 8” to 16” Installation • Brass Plug • 12” Stainless-Steel Flex Hose, Mud Guards Included	12	$122.50
	♿	P-1131B-CP NEW	Chrome	• Two Handle Roman Tub Valve Set • 1/2" PEX Inlet & Outlet • Quick-Mount Connector • Deck or Ledge Mount • Ceramic Disc Cartridges • 3-Hole 8" to 16" Installation • Brass Plug • Mud Guards Included • Preinstalled PEX Fittings Meet ASTM F1807	12	$126.40

SINGLE HANDLE DIVERTER VALVES

		MODEL#	FINISH	DESCRIPTION	CASE	PRICE
		P-2240B	Rough Brass	• Single-Handle Diverter Valve • Two-Way Diverter Valve • Compression Stem Operation • 1/2" IPS Connection	10	$33.90

ACCESSORIES

SHOWERHEADS

	MODEL#	FINISH	DESCRIPTION	CASE	PRICE
	OP-640035	Chrome	• Four-Function Showerhead • Rub-Clean Anti-Scale Spray • Brass Ball Swivel Joint • 3-3/8" Face • 1.75 GPM @ 80 PSI	70	$37.20
	OP-640035-BN	PVD Brushed Nickel		70	$45.50
	OP-640035-ORB	Oil Rubbed Bronze		70	$49.40
	OP-640037	Chrome	• Single-Function Rain Showerhead • Rub-Clean Anti-Scale Spray • Offset Brass Ball Swivel Joint • 6" Face • 1.75 GPM @ 80 PSI	- - -	$58.40
	OP-640037-BN	PVD Brushed Nickel		- - -	$66.30
	OP-640038	Chrome	• Single-Function Showerhead • Rub-Clean Anti-Scale Spray • Ball Swivel Joint • 3-3/4" Face • 1.75 GPM @ 80 PSI	48	$33.10
	OP-640039	Chrome	• Single-Function Showerhead • Rub-Clean Anti-Scale Spray • Ball Swivel Joint • 3-3/4" Face • 1.5 GPM @ 80 PSI	48	$35.20
	OP-640041	Chrome	• Three-Function Showerhead • Rub-Clean Anti-Scale Spray • Brass Ball Swivel Joint • 4-5/8" Face • 1.75 GPM @ 80 PSI	- - -	$54.60
	OP-640042	Chrome	• Single-Function Square Showerhead • Rub-Clean Anti-Scale Spray • Brass Ball Swivel Joint • 4" Face • 1.75 GPM @ 80 PSI	- - -	$57.40

ACCESSORIES

SHOWERHEADS

	MODEL#	FINISH	DESCRIPTION	CASE	PRICE
	OP-640022	Chrome	• Three-Function Pulsating Showerhead • 3 Spray Patterns • Brass Ball Swivel Joint • 2-1/2" Face • 1.5 GPM @ 80 PSI	100	$24.50
	OP-640022-BN	PVD Brushed Nickel		100	$37.20
	OP-640022-ORB	Oil Rubbed Bronze		100	$39.40
	OP-640029	Chrome	• Three-Function Pulsating Showerhead • 3 Spray Patterns • Brass Ball Swivel Joint • 2-1/2" Face • 1.75 GPM @ 80 PSI	50	$29.00
	OP-640029-BN	PVD Brushed Nickel		50	$41.00
	OP-640029-ORB	Oil Rubbed Bronze		50	$44.30
	OP-640031	Chrome	• Single-Function Standard Showerhead • Adjustable Flow • 1-3/4" Face • 1.75 GPM @ 80 PSI	200	$13.20
	OP-640047	Chrome	• Single-Function Rain Showerhead • Rub-Clean Anti-Scale Spray • Brass Ball Swivel Joint • 6" Face • 1.75 GPM @ 80 PSI	- - -	$59.00
	OP-640048	Chrome	• Single-Function Standard Showerhead • 2-5/8" Face • 1.75 GPM @ 80 PSI	- - -	$23.20
	OP-640053	Chrome	• Single-Function Standard Showerhead • 2-11/16" Face • 1.5 GPM @ 80 PSI	- - -	$26.80

ACCESSORIES

TUB SPOUTS

	MODEL#	FINISH	DESCRIPTION	CASE	PRICE
	OP-640014	Chrome	• 1/2" IPS Tub Spout • Zinc Die-Cast Construction • 5-1/4" Reach	50	$11.80
	OP-640014-BN	PVD Brushed Nickel		50	$18.70
	OP-640015	Chrome	• 1/2" IPS Diverter Tub Spout • Zinc Die-Cast Construction • 5-1/4" Reach	50	$17.40
	OP-640015-BN	PVD Brushed Nickel		50	$24.00
	OP-640018	Chrome	• Combo Diverter Tub Spout • Zinc Die-Cast Construction • 5-1/4" Reach • 1/2" IPS or Slip-Fit Installation	50	$22.00
	OP-640018-BN	PVD Brushed Nickel		50	$28.70
	OP-640018-ORB	Oil Rubbed Bronze		50	$31.20
	OP-640019	Chrome	• Combo Tub Spout • Zinc Die-Cast Construction • 5-1/4" Reach • 1/2" IPS or Slip-Fit Installation	50	$15.90
	OP-640019-BN	PVD Brushed Nickel		50	$25.10
	OP-640019-ORB	Oil Rubbed Bronze		50	$26.80
	OP-640033	Chrome	• Extended Combo Diverter Tub Spout • Zinc Die-Cast Construction • 7" Reach • 1/2" IPS or Slip-Fit Installation	25	$45.50
	OP-640033-BN	PVD Brushed Nickel		25	$62.50
	OP-640034	Chrome	• Extended Combo Tub Spout • Zinc Die-Cast Construction • 7" Reach • 1/2" IPS or Slip-Fit Installation	25	$37.20
	OP-640034-BN	PVD Brushed Nickel		25	$53.50

ACCESSORIES

TUB SPOUTS

	MODEL#	FINISH	DESCRIPTION	CASE	PRICE
	OP-640040	Chrome	• Extended i2 Combo Diverter Tub Spout • Zinc Die-Cast Construction • 7” Reach • 1/2” IPS or Slip-Fit Installation	- - -	$60.60
	OP-640040-BN	PVD Brushed Nickel		- - -	$68.80
	OP-640043	Chrome	• Extended i3 Combo Diverter Tub Spout • Zinc Die-Cast Construction • 7” Reach • 1/2” IPS or Slip-Fit Installation	- - -	$98.10
	OP-640044	Chrome	• Extended i3 Combo Tub Spout • Zinc Die-Cast Construction • 7” Reach • 1/2” IPS or Slip-Fit Installation	- - -	$99.10
	OP-640046	Chrome	• Combo Diverter Tub Spout • Zinc Die-Cast Construction • 5-1/4” Reach • 1/2” IPS or Slip-Fit Installation	- - -	$25.40
	OP-640063	Chrome	• Extended Combo Diverter Tub Spout • Zinc Die Cast Construction • 7” Reach • 1/2” IPS or Slip-Fit Installation	- - -	$68.00
	OP-640063-BN	PVD Brushed Nickel		- - -	$75.00
	OP-640063-MB	Matte Black		- - -	$79.00

ACCESSORIES

DRAINS: WASTE & OVERFLOW

	MODEL#	FINISH	DESCRIPTION	CASE	PRICE
	D-820H-PVC	Chrome	• Overflow and Waste Drain Half Kit • Schedule 40 PVC • Includes Test Kit • Less Pipe and Tee • Contains Overflow Snap-In Cap and Push & Pull Strainer Group • Brass Strainer Body • Doubles Overflow Drain Capacity Compared With Screw Faceplate	20	$50.00
	D-820H-PVC-BN	PVD Brushed Nickel		20	$71.00
	D-820H-PVC-MB	Matte Black		20	$72.00
	D-820HE-PVC	Chrome	• Overflow and Waste Drain Half Kit • Schedule 40 PVC • Includes Test Kit • Less Pipe and Tee • Contains Overflow 1-Hole Faceplate With Screw and Push & Pull Strainer Group • Brass Strainer Body	12	$48.00
	D-820HE-PVC-BN	PVD Brushed Nickel		12	$65.00
	D-820HE-PVC-ORB	Oil Rubbed Bronze		12	$69.00
	D-820R-PVC		• Overflow and Waste Drain Rough-In Kit • Schedule 40 PVC • Includes Test Kit • Less Pipe and Tee • Brass Strainer Body	24	$29.00

ACCESSORIES

DRAINS: WASTE & OVERFLOW

	MODEL#	FINISH	DESCRIPTION	CASE	PRICE
	D-820RS-PVC		• Overflow and Waste Drain Rough-In Kit • Schedule 40 PVC • Includes Test Kit • Less Pipe and Tee • Brass Strainer Body • T-Pipe	20	$35.00
	D-820T	Chrome	• Overflow and Waste Drain Trim Kit • Contains Overflow Snap-In Cap and Push & Pull Strainer Group • For Use With D-820R-PVC & D-820RS-PVC • Doubles Overflow Drain Capacity Compared With Screw Faceplate	22	$18.00
	D-820T-BN	PVD Brushed Nickel		22	$39.00
	D-820T-ORB	Oil Rubbed Bronze		22	$40.00
	D-820T-MB	Matte Black		22	$40.00
	D-820TE	Chrome	• Overflow and Waste Drain Trim Kit • Contains Overflow 1-Hole Faceplate With Screw and Push & Pull Strainer Group • For Use With D-820R-PVC & D-820RS-PVC	22	$16.00
	D-820TE-BN	PVD Brushed Nickel		22	$33.40
	D-820TE-ORB	Oil Rubbed Bronze		22	$37.00

ACCESSORIES

BATHROOM DRAINS

	MODEL#	FINISH	DESCRIPTION	CASE	PRICE
	OP-630001	Chrome	• Brass Grid Strainer Drain Assembly • For Use With Sinks With Overflow Drains • 1-1/4" All Brass Grid Drain	50	$30.50
	OP-630007	Chrome	• Push-Down Drain With Overflow • For Use With Sinks With Overflow Drains • 1-1/4" Push-Down Drain	- - -	$30.80
	OP-630011	Chrome	• 50/50 Push-Down Drain With Overflow • For Use With Sinks With Overflow Drains • 1-1/4" 50/50 Push Down Drain	- - -	$21.00
	OP-630002	Chrome	• Brass Pop-Up Drain Assembly • For Use With Sinks With Overflow Drains • 1-1/4" All Brass Pop-Up Drain	50	$29.90
	OP-630002-BN	PVD Brushed Nickel		50	$33.60
	OP-630002-ORB	Oil Rubbed Bronze		50	$34.40

ACCESSORIES

BATHROOM DRAINS

	MODEL#	FINISH	DESCRIPTION	CASE	PRICE
	OP-630004	Chrome	• 50/50 Pop-Up Drain Assembly • For Use With Sinks With Overflow Drains • 1-1/4" 50/50 Pop-Up Drain	50	$24.30
	OP-630004-BN	PVD Brushed Nickel		50	$27.00
	OP-630004-ORB	Oil Rubbed Bronze		50	$27.90
	OP-630005	Chrome	• 50/50 Pop-Up Drain Assembly • For Use With Sinks With Overflow Drains • 1-1/4" 50/50 Pop-Up Drain	- - -	$29.60
	OP-630006	Chrome	• Brass Pop-Up Drain Assembly • For Use With Sinks With Overflow Drains • 1-1/4" All Brass Pop-Up Drain	- - -	$32.00

ACCESSORIES

STRAINERS

	MODEL#	FINISH	DESCRIPTION	CASE	PRICE
	ACS-300100	Chrome	• Stainless-Steel Duo-Basket Strainer • Heavy-Duty Design Fits All 3-1/2" or 4" Drain Opening • Long-Lasting Finish • Removable Basket Strainer With Open/Close Stopper That Seals Tightly • Post-Type Strainer	50	$9.00
	ACS-300200	Chrome	• Stainless-Steel Easy-Connect Basket Strainer • Heavy-Duty Design Fits All 3-1/2" or 4" Drain Opening • Long-Lasting Finish • Features Quick-Locking Easy-Installation System • Post-Type Strainer	50	$11.60
	ACS-300400	Chrome	• Stainless-Steel Double-Cup Basket Strainer • Heavy-Duty Design Fits All 3-1/2" or 4" Drain Opening • Long-Lasting Finish • Removable Basket Strainer With Open/Close Stopper That Seals Tightly • Post-Type Strainer • Features Long Shank for Extra-Thick Deck	50	$15.20
	ACS-300500	Chrome	• Stainless-Steel Spin & Seal Basket Strainer • Heavy-Duty Design Fits All 3-1/2" or 4" Drain Opening • Long-Lasting Finish • Removable Basket Strainer With Open/Close Stopper That Seals Tightly • Spin-Type Strainer • Features Spin & Seal Operation	50	$16.00

ACCESSORIES

MISCELLANEOUS

	MODEL#	FINISH	DESCRIPTION	CASE	PRICE
	ACS-903100	Chrome	• Dishwasher Air Gap • Plastic Body Included • 1-3/4" Cap Diameter • 2-1/2" Cap Height • 8-7/8" Overall Height With Plastic Body	96	$9.20
	ACS-903100-BN	PVD Brushed Nickel		96	$12.90
	ACS-903100-ORB	Oil Rubbed Bronze		96	$14.20
	ACS-903500	Chrome	• Soap/Lotion Dispenser • Heavy Metal Dispenser • Plastic Bottle • Solid Brass • Includes Bottle and Dispenser Pump • Dispenser Capacity 12 Oz. • Fits 3/4" Thick Deck • 1-1/2" Optional Extension Available for Thicker Deck	25	$26.10
	ACS-903500-BN	PVD Brushed Nickel		25	$35.50
	OP-640017	Chrome	• Renovation Faceplate • Faceplate Converts 2- or 3-Handle Shower to 1 Handle • With No Tile Replacements • Works with All Olympia Pressure Balance Valves	60	$73.10
	OP-640017-BN	PVD Brushed Nickel		60	$111.80
	OP-640017-ORB	Oil Rubbed Bronze		60	$114.10
	OP-490045		• Replacement Parts Kit • Genuine Olympia Products Repair Parts • Includes OP-490046 (1 Pc), OP-340008 (1 Pc), OP-390004 (6 Pcs), • OP-390005 (6 Pcs), OP-4900019 (6 Pcs), OP-420001 (6 Pcs), • OP-490026 (2 Pcs), OP-490027 (2 Pcs), OP-430006 (2 Pcs), • OP-420005 (2 Pcs), OP-420024 (4 Pcs), OP-390001 (3 Pcs), • OP-490004 (3 Pcs), OP-490041 (5 Pcs)	20	$111.20
	OP-420092 NEW	Chrome	• Touchless Pull-Down Spray Head • Max 3" Distance to Activate Sensor • 3 Minutes Auto Shut Off • Rechargeable USB Cable Included • 1/2" Female IPS Connection	- - -	$117.00
	OP-420092-BN NEW	PVD Brushed Nickel		- - -	$124.00
	OP-420092-MB NEW	Matte Black		- - -	$124.00

ACCESSORIES

AERATORS

MODEL#	FINISH	DESCRIPTION	CASE	PRICE
OP-430006	Chrome	• Female 55/64" Thread Aerator – 2.0 GPM	- - -	$5.90
OP-430007	Chrome	• Female 55/64" Thread Aerator – 1.5 GPM	- - -	$8.30
OP-430007-BN	PVD Brushed Nickel		- - -	$11.80
OP-430007-ORB	Oil Rubbed Bronze		- - -	$12.30
OP-430011	Chrome	• Female 55/64" Thread Aerator – 0.5 GPM	- - -	$9.80
OP-430011-BN	PVD Brushed Nickel		- - -	$15.30
OP-430011-ORB	Oil Rubbed Bronze		- - -	$16.40
OP-430012	Chrome	• Female 55/64" Thread Aerator – 1.0 GPM	- - -	$11.60
OP-430012-BN	PVD Brushed Nickel		- - -	$12.90
OP-430012-ORB	Oil Rubbed Bronze		- - -	$14.20
OP-490010	Chrome	• Male 15/16" Thread Aerator – 1.5 GPM	- - -	$6.40
OP-490010-BN	PVD Brushed Nickel		- - -	$8.40
OP-490010-ORB	Oil Rubbed Bronze		- - -	$9.50
OP-490019	Chrome	• Male 15/16" Thread Aerator – 2.0 GPM	- - -	$3.10
OP-490026	Chrome	• Female 55/64" Thread Aerator – 2.0 GPM	- - -	$2.00
OP-490027	Chrome	• Female 55/64" Thread Aerator – 2.0 GPM	- - -	$3.40
OP-490035	Chrome	• Female 55/64" Thread Aerator – 1.5 GPM	- - -	$8.30
OP-490035-BN	PVD Brushed Nickel		- - -	$9.60
OP-490035-ORB	Oil Rubbed Bronze		- - -	$11.80
OP-490055	Chrome	• Female 55/64" Thread Aerator – 0.5 GPM	- - -	$10.60
OP-490055-BN	PVD Brushed Nickel		- - -	$11.00
OP-490055-ORB	Oil Rubbed Bronze		- - -	$12.90
OP-490056	Chrome	• Female 55/64" Thread Aerator – 1.0 GPM	- - -	$11.80
OP-490056-BN	PVD Brushed Nickel		- - -	$12.30
OP-490056-ORB	Oil Rubbed Bronze		- - -	$14.00
OP-490058	Chrome	• Male 15/16" Thread Aerator – 1.0 GPM	- - -	$9.80
OP-490058-BN	PVD Brushed Nickel		- - -	$11.00
OP-490058-ORB	Oil Rubbed Bronze		- - -	$12.90
OP-490059	Chrome	• Male 15/16" Thread Aerator – 0.5 GPM	- - -	$9.80
OP-490059-BN	PVD Brushed Nickel		- - -	$11.00
OP-490059-ORB	Oil Rubbed Bronze		- - -	$12.90
OP-490060	Chrome	• Female 55/64" Thread Aerator – 1.0 GPM	- - -	$12.30
OP-490060-BN	PVD Brushed Nickel		- - -	$13.40
OP-490060-ORB	Oil Rubbed Bronze		- - -	$14.50
OP-490061	Chrome	• Female 55/64" Thread Aerator – 0.5 GPM	- - -	$12.30
OP-490061-BN	PVD Brushed Nickel		- - -	$13.40
OP-490061-ORB	Oil Rubbed Bronze		- - -	$14.50
OP-490062	Chrome	• Male 13/16" Thread Aerator and Aerator Tool – 1.2 GPM	- - -	$7.90
OP-490063	Chrome	• Male 13/16" Thread Aerator – 1.2 GPM	- - -	$6.90
OP-490064	Chrome	• Female 55/64" Thread Aerator – 1.2 GPM	- - -	$7.70
OP-490065	Chrome	• Male 15/16" Thread Aerator – 1.2 GPM	- - -	$6.90

PARTS

CERAMIC CARTRIDGES & ASSOCIATED CARTRIDGE PARTS

	MODEL / DESCRIPTION	PRICE	FOR USE WITH	
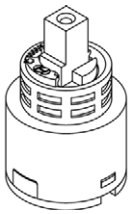	**OP-320002** Ceramic Cartridge	$16.70	**KITCHEN** K-5030 K-5441	**BATHROOM** L-6020 L-6021 L-6022 L-6023 L-6025
	OP-330002C Ceramic Stem – Cold **OP-330002H** Ceramic Stem – Hot	$9.60	**BATHROOM** L-7330 L-7332 L-7372 L-7420 L-7422 L-7470 L-7472 L-7490 L-7492 L-7520 L-7522 L-7570 L-7572	
	OP-340001 Stem Set	$17.40	**TUB & SHOWER** P-1210 P-1212 P-1220 P-1222 P-3210 P-3220	
	OP-340002 Diverter Stem Set	$16.50	**TUB & SHOWER** P-3210 P-3220	
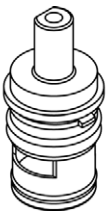	**OP-340004C** Ceramic Stem – Cold **OP-340004H** Ceramic Stem – Hot	$12.90	**TUB & SHOWER** P-1131B P-1131T P-1141T P-1171T	
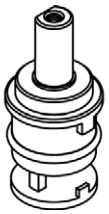	**OP-340006C** Cartridge Unit – Cold **OP-340006H** Cartridge Unit – Hot	$4.90	**TUB & SHOWER** P-1230 P-1232 P-1250 P-3230 P-3250	

PARTS

CERAMIC CARTRIDGES & ASSOCIATED CARTRIDGE PARTS

	MODEL / DESCRIPTION	PRICE	FOR USE WITH			
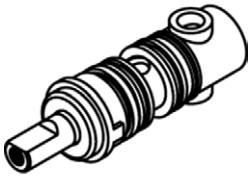	**OP-340007** Diverter Stem Unit	$7.10	**TUB & SHOWER**			
			P-3230 P-3250			
	OP-340009 Pressure Balance Ceramic Disc Cartridge	$43.80	**TUB & SHOWER**			**VALVES**
			T-2300	T-2370	T-2396	V-2300B
			T-2301	T-2371	T-2397	V-2301B
			T-2302	T-2372	T-2398	V-2302B
			T-2303	T-2373	T-4AM100	V-2303B
			T-2306	T-2374	T-4DM100	V-2304B
			T-2307	T-2375	T-4DM300	V-2305B
			T-2310	T-2380	T-4LG100	V-2306B
			T-2312	T-2381	T-4LG300	V-2307B
			T-2330	T-2382	T-4LG400	V-2308B
			T-2331	T-2383	T-4MO100	V-2309B
			T-2332	T-2384	T-4MO110	V-2311B
			T-2333	T-2385	T-4MO200	V-2316B
			T-2334	T-2386	T-4MO300	V-2400B
			T-2335	T-2387	T-4MO310	V-2402B
			T-2340	T-2390	T-4MO400	V-2403B
			T-2342	T-2391	T-4MT110	V-2404B
			T-2343	T-23910	T-4MT111	V-2405B
			T-2350	T-23911	T-4MT115	V-2407B
			T-2351	T-23912	T-4MT120	V-2408B
			T-2352	T-23913	T-4MT131	V-2410B
			T-2353	T-23914	T-4MT200	V-2411B
			T-2354	T-23915	T-4MT201	V-2412B
			T-2360	T-23916	T-4MT300	V-2415B
			T-2361-EX	T-2392	T-4MT315	V-2416B
			T-2362	T-2393	T-4MT320	
			T-2363	T-2394	T-4MT330	
			T-2368	T-2395	T-4MT400	
			T-2369			
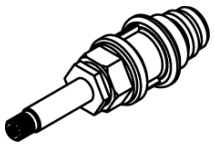	**OP-360001** Diverter Stem Unit	$16.40	**TUB & SHOWER**			
			P-2240B P-2240T			

PARTS

CERAMIC CARTRIDGES & ASSOCIATED CARTRIDGE PARTS

	MODEL / DESCRIPTION	PRICE	FOR USE WITH			
	OP-390001 Stainless-Steel Ball	$4.20	**KITCHEN**		**BATHROOM**	
			K-4160 K-4160B K-4160H K-4161 K-4161B K-4161H	K-4162 K-4162B K-4162H K-4163 K-4164 K-4170 K-4171	L-6160 L-6160B L-6160H L-6161 L-6161G L-6161H L-6162 L-6162B L-6162H L-6164	L-6165B L-6170 L-6172 L-6174 L-6260BH L-6260H L-6262BH L-6262H P-2000 P-2002
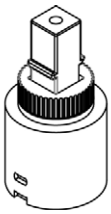	**OP-390003** Ceramic Cartridge	$15.50	**KITCHEN**	**BATHROOM**		
			K-5010 K-5015 K-5020 K-5025	L-6050 L-6050-WD L-6050B L-6051 L-6051-WD L-6051G L-6052	L-6052-WD L-6052B L-6053 L-6055 L-6090 L-6090-WD	L-6090B L-6092 L-6092-WD L-6092B L-6093 L-6095
	OP-390004 Stem Unit – Brass Post	$5.50	**BAR**	**KITCHEN**	**BATHROOM**	
			B-8150 B-8160 B-8170 B-8171 B-8180 B-8181 B-8190 B-8191	K-5120 K-5121 K-5130 K-5131 K-5150 K-5160 K-5161 K-5170 K-5171 K-5340 K-5342 K-5350 K-5370 K-5372	L-7220 L-7221 L-7222 L-7240 L-7240B L-7241 L-7242 L-7242B L-7245 L-7251 L-7251G L-7270 L-7271 L-7272	L-7272B L-7290 L-7291 L-7292

PARTS

CERAMIC CARTRIDGES & ASSOCIATED CARTRIDGE PARTS

	MODEL / DESCRIPTION	PRICE	FOR USE WITH
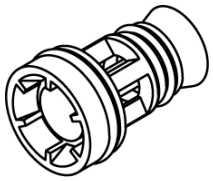	**OP-420005** Diverter Piston	$2.90	**KITCHEN** K-4160 K-4161 K-4162 K-4163 K-4164 K-4170 K-4171
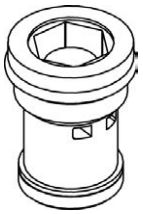	**OP-420024** Diverter Piston	$6.40	**KITCHEN** 1173-LE6-Q 2AM401 2AM501 2DM201 K-5121 K-5131 K-5161 K-5171 K-5342 K-5372 K-5441
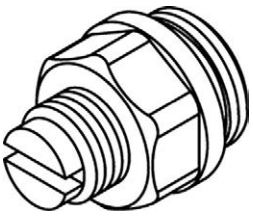	**OP-440007** Inlet Supply Stop	$11.00	**VALVES** 4400B 4410B V-2300B V-2300B-B V-2300B-EP90D V-2300B-EP90U V-2301B V-2301B-B V-2302B V-2302B-B V-2303B V-2303B-B V-2304B V-2304B-B V-2305B V-2305B-B V-2306B V-2306B-B V-2307B V-2307B-B V-2308B V-2308B-B V-2309B V-2309B-EP90U V-2311B V-2311B-B V-2316B V-2316B-B
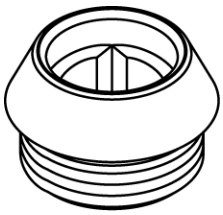	**OP-440014** Shower Seat	$2.10	**TUB & SHOWER** P-1210 P-1212 P-1220 P-1222 P-3210 P-3220
	OP-440045 Tub & Shower – 1" Extension	$27.30	**VALVE** V-2300B V+2400B

PARTS

CERAMIC CARTRIDGES & ASSOCIATED CARTRIDGE PARTS

	MODEL / DESCRIPTION	PRICE	FOR USE WITH			
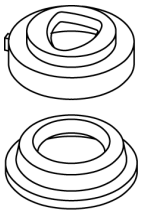	**OP-490004** Cam & Washer	$5.50	**KITCHEN**	**BATHROOM**		**VALVES**
			K-4160 K-4160B K-4160H K-4161 K-4161B K-4161H K-4162 K-4162B K-4162H K-4163 K-4164 K-4170 K-4171	L-6160 L-6160B L-6160H L-6161 L-6161G L-6161H L-6162 L-6162B L-6162H L-6164 L-6165B L-6170 L-6172	L-6172-BN L-6174 L-6260BH L-6260H L-6262BH L-6262H	P-2000 P-2002
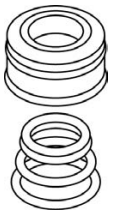	**OP-490041** Springs & Seats	$1.50	**KITCHEN**	**BATHROOM**		**BAR**
			K-4160 K-4160B K-4160H K-4161 K-4161B K-4161H K-4162 K-4162B K-4162H K-4163 K-4164 K-4170 K-4171 K-5120 K-5121 K-5130 K-5131 K-5150 K-5160 K-5161 K-5170 K-5171 K-5340 K-5342 K-5350 K-5370 K-5372	L-6160 L-6160B L-6160H L-6161 L-6161G L-6161H L-6162 L-6162B L-6162H L-6164 L-6165B L-6170 L-6172 L-6174 L-6260BH L-6260H L-6262BH L-6262	L-7220 L-7221 L-7222 L-7240 L-7240B L-7241 L-7242 L-7242B L-7245 L-7251 L-7251G L-7270 L-7271 L-7272 L-7272B L-7290 L-7291 L-7292	B-8150 B-8160 B-8170 B-8171 B-8180 B-8181 B-8190 B-8191 **VALVES** P-1230 P-1232 P-1250 P-2000 P-2002 P-3230 P-3250

PARTS

PART #	DESCRIPTION	PCS/ CS	LIST PRICE
ACS-300100	Stainless-Steel Duo-Basket Strainer	50	$9.00
ACS-300200	Stainless-Steel Easy-Connect Basket Strainer	50	$11.60
ACS-300400	Stainless-Steel Double-Cup Basket Strainer	50	$15.20
ACS-300500	Stainless-Steel Spin & Seal Basket Strainer	50	$16.00
ACS-903100	Dishwasher Air Gap	96	$9.20
ACS-903100-BN	Dishwasher Air Gap	96	$12.90
ACS-903100-ORB	Dishwasher Air Gap	96	$14.20
ACS-903500	Soap/Lotion Dispenser	25	$26.10
ACS-903500-BN	Soap/Lotion Dispenser	25	$35.50
OP-120001	Metal Lever Handle Set	- - -	$18.90
OP-120002	Lever Handle	- - -	$17.30
OP-120003	Metal Loop Handle Set	- - -	$23.90
OP-120004	Lever Handle	- - -	$16.30
OP-130001	Lever Handle	- - -	$15.20
OP-130002	Lever Handle	- - -	$19.50
OP-130003	Lever Handle	- - -	$17.40
OP-140004V	Large Metal Round Handle Set – Diverter	- - -	$11.50
OP-140005V	Large Acrylic Round Handle Set – Diverter	- - -	$6.50
OP-140006	Metal Lever Handle	- - -	$10.70
OP-140007	Lever Handle	- - -	$34.90
OP-140008	Lever Handle	- - -	$19.00
OP-140008-BN	Lever Handle	- - -	$31.70
OP-140009	Lever Handle	- - -	$12.20
OP-140010	Metal Loop Handle	- - -	$12.30
OP-140011	Lever Handle	- - -	$23.90
OP-140013C	Acrylic Round Handle – Cold	- - -	$6.80
OP-140013H	Acrylic Round Handle – Hot	- - -	$6.80
OP-140013V	Acrylic Round Handle – Diverter	- - -	$7.30
OP-140014	Metal Lever Handle	- - -	$18.40
OP-140015	Lever Handle	- - -	$23.00
OP-140017	Lever Handle	- - -	$36.50
OP-140018	Lever Handle	- - -	$26.00
OP-140019	Lever Handle	- - -	$28.50
OP-140020	Lever Handle	- - -	$26.00
OP-140021	Lever Handle	- - -	$28.20
OP-160001	Handle Hub	- - -	$17.80
OP-160002	Lever Handle	- - -	$11.40
OP-160003	Lever Handle	- - -	$23.90
OP-190001	Metal Lever Handle	- - -	$15.60
OP-190002	Metal Loop Handle	- - -	$14.40
OP-190003C	Acrylic Round Handle – Cold	- - -	$4.20
OP-190003H	Acrylic Round Handle – Hot	- - -	$4.20
OP-190004C	Mini Blade Handle – Cold	- - -	$4.80
OP-190004H	Mini Blade Handle – Hot	- - -	$4.80
OP-190005C	ADA Wrist Blade Square Handle Set – Cold	- - -	$11.50
OP-190005H	ADA Wrist Blade Square Handle Set – Hot	- - -	$11.50
OP-190006C	Handle Hub – Cold	- - -	$10.70
OP-190006H	Handle Hub – Hot	- - -	$10.70
OP-190008	Acrylic Round Handle	- - -	$7.00
OP-190009C	Large Acrylic Round Handle – Cold	- - -	$6.50
OP-190009H	Large Acrylic Round Handle – Hot	- - -	$7.00
OP-190010C	Lever Handle – Cold	- - -	$15.60
OP-190010H	Lever Handle – Hot	- - -	$15.60
OP-190013C	Large Metal Round Handle – Cold	- - -	$11.50

PART #	DESCRIPTION	PCS/ CS	LIST PRICE
OP-190013H	Large Metal Round Handle – Hot	- - -	$11.50
OP-190014C	ADA Wrist Blade Handle – Cold	- - -	$15.60
OP-190014H	ADA Wrist Blade Handle – Hot	- - -	$15.60
OP-190015C	Lever Handle – Cold	- - -	$15.70
OP-190015H	Lever Handle – Hot	- - -	$15.60
OP-190016C	Lever Handle – Cold	- - -	$19.10
OP-190016H	Lever Handle – Hot	- - -	$19.10
OP-220001	D-Style Spout	- - -	$41.20
OP-220002	D-Style Spout	- - -	$34.70
OP-220003	High-Arc Spout	- - -	$47.00
OP-220004	High Gooseneck Spout	- - -	$38.00
OP-220005	High Gooseneck Spout	- - -	$31.00
OP-230001	C-Style Spout	- - -	$124.70
OP-230005	J-Style Spout	- - -	$156.80
OP-230006	Gooseneck Spout Set	- - -	$107.10
OP-240007	C-Spout	- - -	$140.80
OP-250002	8-15/16" High Spout	- - -	$32.60
OP-250004	8-15/16" High Spout	- - -	$33.00
OP-250005	9-7/8" High Gooseneck Spout	- - -	$29.70
OP-250007	7-9/16" Hi-Tubular Spout	- - -	$31.00
OP-320001	Ceramic Cartridge	- - -	$16.50
OP-320002	Ceramic Cartridge	- - -	$16.70
OP-330002C	Ceramic Stem – Cold	- - -	$9.60
OP-330002H	Ceramic Stem – Hot	- - -	$9.60
OP-340001	Stem Set	- - -	$17.40
OP-340002	Diverter Stem Set	- - -	$16.50
OP-340004C	Ceramic Stem – Cold	- - -	$12.90
OP-340004H	Ceramic Stem – Hot	- - -	$12.90
OP-340006C	Cartridge Unit – Cold	- - -	$4.90
OP-340006H	Cartridge Unit – Hot	- - -	$4.90
OP-340007	Diverter Stem Unit	- - -	$7.10
OP-340009	Cartridge for Olympia Single-Handle Tub & Shower Valve	200	$43.80
OP-340010	Temperature Adjusting Ring	- - -	$1.70
OP-360001	Diverter Stem Unit	- - -	$16.40
OP-390001	Stainless-Steel Ball	- - -	$4.20
OP-390003	Ceramic Cartridge	- - -	$15.50
OP-390004	Stem Unit – Brass Post	- - -	$5.50
OP-390005	Stem Unit – Plastic Post	- - -	$5.50
OP-420001	Spout O-Rings	- - -	$0.90
OP-420002	Spout Gasket	- - -	$0.90
OP-420003	Deck Plate	- - -	$22.50
OP-420004	Mounting Gasket	- - -	$2.00
OP-420005	Diverter Piston	- - -	$2.90
OP-420006	Deck Plate	- - -	$15.30
OP-420008	Cap	- - -	$5.90
OP-420009	Retainer Nut	- - -	$8.50
OP-420010	Spout O-Rings	- - -	$0.90
OP-420011	Spray-Head Guide	- - -	$0.90
OP-420012	Pull-Out Spray Head – 1.5 GPM	- - -	$24.60
OP-420012-BN	Pull-Out Spray Head – 1.5 GPM	- - -	$30.90
OP-420012-ORB	Pull-Out Spray Head – 1.5 GPM	- - -	$50.60
OP-420013	Deck Plate	- - -	$18.20
OP-420014	Hose Weight	- - -	$11.70
OP-420015	Spray Hose	- - -	$30.50
OP-420017	Spray-Head Button	- - -	$0.90
OP-420018	D-Style Spout Cap & Packing	- - -	$4.20
OP-420019	D-Style Spout O-Ring	- - -	$0.90
OP-420020	D-Style Spout Gasket	- - -	$0.90
OP-420021	High-Arc Spout Bonnet Nut	- - -	$4.60

PARTS

PART #	DESCRIPTION	PCS/ CS	LIST PRICE
OP-420023	Shank Extension for Soap/Lotion Dispenser	- - -	$9.30
OP-420024	Diverter Piston	- - -	$6.40
OP-420025	Deck Plate	- - -	$14.70
OP-420026	Mounting Gasket	- - -	$1.40
OP-420041	Spout Repair Kit	- - -	$1.10
OP-420042	Retainer Nut	- - -	$3.60
OP-420043	Cap	- - -	$7.10
OP-420044	Washer	- - -	$0.90
OP-420045	Deck Plate	- - -	$14.00
OP-420046	Spray-Head Push Button	- - -	$1.30
OP-420047	Allen Screw	- - -	$0.90
OP-420048	Aerator – 1.5 GPM	- - -	$7.10
OP-420049	Spout Repair Kit	- - -	$6.40
OP-420050	Cap & Washer	- - -	$2.90
OP-420055	Spray Hose	- - -	$11.90
OP-420056	Spout Repair Kit	- - -	$1.10
OP-420057	Retainer Nut	- - -	$3.60
OP-420058	Cap	- - -	$7.70
OP-420059	Washer	- - -	$0.90
OP-420060	Spray-Head O-Ring	- - -	$0.70
OP-420061	Handle 3/32” Allen Screw	- - -	$0.90
OP-420062	Hose Weight	- - -	$11.10
OP-420063	Pull-Out Spray Head – 1.8 GPM	- - -	$22.00
OP-420064	Pull-Down Spray Head & Spray Head Hose – 1.8 GPM	- - -	$37.00
OP-420064-BN	Pull-Down Spray Head & Spray Head Hose – 1.8 GPM	- - -	$41.10
OP-420067	Pull-Down Spray Head – 1.8 GPM	- - -	$26.00
OP-420068	Pull-Down Spray Head – 1.5 GPM	- - -	$27.00
OP-420068-BN	Pull-Down Spray Head – 1.5 GPM	- - -	$31.10
OP-420069	Spring	- - -	$54.10
OP-420070	Hose Weight	- - -	$14.30
OP-420071	Pull-Down Spray Head – 1.8 GPM	- - -	$36.40
OP-420074	Quick-Connect Spray Head Hose	- - -	$21.60
OP-420075	Spray-Head Washer	- - -	$1.40
OP-420077	Quick-Connect Hose and Spray Assembly	- - -	$16.90
OP-420092	Touchless Pull-Down Spray Head	- - -	$117.00
OP-420092-BN	Touchless Pull-Down Spray Head	- - -	$124.00
OP-420092-MB	Touchless Pull-Down Spray Head	- - -	$124.00
OP-430001	Spout Mounting Hardware	- - -	$4.20
OP-430005	Lift Rod Hole Cover Button	- - -	$2.50
OP-430006	Female 55/64” Thread Aerator – 2.0 GPM	- - -	$5.90
OP-430007	Female 55/64” Thread Aerator – 1.5 GPM	- - -	$8.30
OP-430007-BN	Female 55/64” Thread Aerator – 1.5 GPM	- - -	$11.80
OP-430007-ORB	Female 55/64” Thread Aerator – 1.5 GPM	- - -	$12.30
OP-430008	Pop-Up Stopper	- - -	$2.80
OP-430009	Pop-Up Horizontal Rod Group	- - -	$3.00
OP-430010	Lift Rod Hole Cover Button	- - -	$1.30
OP-430011	Female 55/64” Thread Aerator – 0.5 GPM	- - -	$9.80
OP-430011-BN	Female 55/64” Thread Aerator – 0.5 GPM	- - -	$15.30
OP-430011-ORB	Female 55/64” Thread Aerator – 0.5 GPM	- - -	$16.40
OP-430012	Female 55/64” Thread Aerator – 1.0 GPM	- - -	$11.60

PART #	DESCRIPTION	PCS/ CS	LIST PRICE
OP-430012-BN	Female 55/64” Thread Aerator – 1.0 GPM	- - -	$12.90
OP-430012-ORB	Female 55/64” Thread Aerator – 1.0 GPM	- - -	$14.20
OP-430016	Pop-Up Stopper	- - -	$5.80
OP-430017	Pop-Up Horizontal Rod Group	- - -	$4.80
OP-430018	Pop-Up Top Flange	- - -	$5.40
OP-430019	Pop-Up Bracket & Screw	- - -	$1.90
OP-430020	Pop-Up Bracket & Screw	- - -	$1.90
OP-430021	Cap	- - -	$7.10
OP-430023	Lift Rod Hole Cover Button	- - -	$1.20
OP-430024	Male 13/16” Thread Aerator – 1.5 GPM	- - -	$6.40
OP-430025	Washer	- - -	$0.90
OP-430026	Mounting Deck Plate Assembly	- - -	$18.50
OP-430027	Valve Escutcheon	- - -	$12.60
OP-430028	Gasket	- - -	$1.40
OP-430029	Bonnet Nut Gasket	- - -	$0.90
OP-430030	Female 55/64” Thread Aerator – 1.2 GPM	- - -	$9.00
OP-430031	Cap	- - -	$7.10
OP-430032	Retainer Nut	- - -	$7.80
OP-430033	Washer	- - -	$2.80
OP-430035	Retainer Nut	- - -	$3.60
OP-430036	Valve Escutcheon	- - -	$12.70
OP-430037	Spout Escutcheon	- - -	$12.70
OP-430046	Female 55/64” Thread Aerator – 0.35 GPM	- - -	$10.00
OP-440007	Inlet Supply Stop	- - -	$11.00
OP-440008	Diverter Piston	- - -	$0.90
OP-440009	Faceplate Set	- - -	$22.10
OP-440010	Faceplate Screw	- - -	$3.60
OP-440011	Faceplate Rubber Gasket	- - -	$2.70
OP-440012	Valve Escutcheon	- - -	$5.50
OP-440013	Plastic Nipple	- - -	$0.90
OP-440014	Shower Seat	- - -	$2.10
OP-440015	Tailpiece Union	- - -	$4.90
OP-440016	Tailpiece Locknut	- - -	$5.50
OP-440017	Mounting Mud Guard	- - -	$1.30
OP-440018	Faceplate Set	- - -	$23.20
OP-440019	Faceplate Screw	- - -	$2.70
OP-440020	Valve Plug	- - -	$3.40
OP-440021	Valve Mud Guard	- - -	$4.20
OP-440023	Outlet Plastic Protection Cap	- - -	$0.90
OP-440024	Valve Mud Guard Screw	- - -	$1.40
OP-440025	Flex Hose Connector	- - -	$20.90
OP-440026	Tee Connector	- - -	$12.90
OP-440027	Male Thread Streamer	- - -	$5.90
OP-440028	C-Spout Button	- - -	$0.90
OP-440029	C-Spout 1/8” Allen Screw	- - -	$0.90
OP-440030	Spout Escutcheon	- - -	$23.80
OP-440031	Valve Escutcheon	- - -	$29.90
OP-440033	Adapter	- - -	$4.90
OP-440034	Diverter Piston	- - -	$2.00
OP-440035	Stem Extension	- - -	$4.20
OP-440036	Sleeve	- - -	$13.90
OP-440037	Flange	- - -	$7.80
OP-440042	Tub Spout Escutcheon	- - -	$10.00
OP-440043	Handle 3/32” Allen Screw	- - -	$1.20
OP-440044	Check Valve & Sleeve	- - -	$11.80
OP-440045	Tub & Shower – 1” Extension	- - -	$27.30
OP-440051	Faceplate Set	- - -	$23.20

PARTS

PART #	DESCRIPTION	PCS/ CS	LIST PRICE
OP-440052	Handle 3/32" Allen Screw	- - -	$0.90
OP-440053	Sleeve Nut	- - -	$6.00
OP-440054	Sleeve	- - -	$7.20
OP-440055	Tub Spout Escutcheon	- - -	$21.00
OP-440056	Faceplate Set	- - -	$33.00
OP-440064	Overflow Snap-In Cap	- - -	$8.90
OP-440065	Push & Pull Strainer Group	- - -	$10.60
OP-450002	Bonnet Nut	- - -	$2.70
OP-450003	Bonnet Nut Gasket	- - -	$0.90
OP-450004	Deck Plate	- - -	$12.20
OP-450005	Mounting Gasket	- - -	$2.00
OP-450010	Spout Bonnet Nut	- - -	$9.60
OP-450011	Deck Plate	- - -	$12.20
OP-450012	Mounting Gasket	- - -	$1.40
OP-450013	ADA Wrist Blade Handle Screw	- - -	$0.90
OP-450014	Hose Thread Adapter	- - -	$2.70
OP-460001	Stem Extension	- - -	$3.60
OP-460002	Flange	- - -	$14.70
OP-460003	Showerhead Holder	- - -	$26.50
OP-460004	Flange	- - -	$5.90
OP-460005	Sleeve	- - -	$10.50
OP-460006	Drop Ell	- - -	$35.40
OP-460006-BN	Drop Ell	- - -	$47.90
OP-460008	Hose	- - -	$25.00
OP-460010	Slide Bar and Hose Support	- - -	$94.40
OP-460011	Screw	- - -	$1.30
OP-460013	Two-Way Diverter	30	$29.70
OP-460019	Showerhead Holder 3/32" Allen Screw	- - -	$0.90
OP-460020	Vacuum Breaker	- - -	$14.70
OP-460021	Hose With 1.75 GPM Restrictor	- - -	$25.40
OP-460022	Handle Adapter	- - -	$4.80
OP-460024	Plastic Mount	- - -	$24.30
OP-460025	Stainless-Steel Hose Washer	- - -	$1.70
OP-460026	Slide Bar With Mounts and Hose Support	- - -	$91.50
OP-460027	Hose	- - -	$24.30
OP-490001C	ADA Wrist Blade Handle Index – Cold	- - -	$1.40
OP-490001H	ADA Wrist Blade Handle Index – Hot	- - -	$1.40
OP-490002	Lever Handle – Index Button	- - -	$0.90
OP-490003	Cap & Adjusting Ring	- - -	$8.40
OP-490004	Cam & Washer	- - -	$5.50
OP-490005	Lever Handle – Index Button	- - -	$0.90
OP-490006	Bonnet Nut	- - -	$6.40
OP-490007	Valve Escutcheon	- - -	$12.60
OP-490008	Flex Connector Hose	- - -	$7.70
OP-490009	Y Connector Set	- - -	$22.50
OP-490010	Male 15/16" Thread Aerator – 1.5 GPM	- - -	$6.40
OP-490010-BN	Male 15/16" Thread Aerator – 1.5 GPM	- - -	$8.40
OP-490010-ORB	Male 15/16" Thread Aerator – 1.5 GPM	- - -	$9.50
OP-490011	3/32" Allen Wrench	- - -	$0.90
OP-490012C	Acrylic Handle Button – Cold	- - -	$1.40
OP-490012H	Acrylic Handle Button – Hot	- - -	$1.40
OP-490013C	Mini Blade Handle Button – Cold	- - -	$1.50
OP-490013H	Mini Blade Handle Button – Hot	- - -	$1.50
OP-490014	Handle Screw	- - -	$0.90
OP-490015	ADA Wrist Blade Square Handle Screw	- - -	$0.90
OP-490016C	ADA Wrist Blade Square Handle Index – Cold	- - -	$0.90
OP-490016H	ADA Wrist Blade Square Handle Index – Hot	- - -	$0.90
OP-490017	Lever Handle Insert – Chrome	- - -	$7.20

PART #	DESCRIPTION	PCS/ CS	LIST PRICE
OP-490018	Lever Handle Insert – White	- - -	$3.40
OP-490019	Male 15/16" Thread Aerator – 2.0 GPM	- - -	$3.10
OP-490021	Acrylic Handle Button	- - -	$3.40
OP-490022	Acrylic Handle Screw	- - -	$0.90
OP-490023	Acrylic Handle Hex Adapter	- - -	$3.60
OP-490025	Large Acrylic Handle Screw	- - -	$1.40
OP-490026	Female 55/64" Thread Aerator – 2.0 GPM	- - -	$2.00
OP-490027	Female 55/64" Thread Aerator – 2.0 GPM	- - -	$3.40
OP-490028	Spout Bonnet Nut	- - -	$8.50
OP-490029	Handle 3/32" Allen Screw	- - -	$1.50
OP-490030	Extension Kit	- - -	$49.10
OP-490035	Female 55/64" Thread Aerator – 1.5 GPM	- - -	$8.30
OP-490035-BN	Female 55/64" Thread Aerator – 1.5 GPM	- - -	$9.60
OP-490035-ORB	Female 55/64" Thread Aerator – 1.5 GPM	- - -	$11.80
OP-490036	1/8" Allen Wrench	- - -	$0.90
OP-490038	Snap Ring	- - -	$2.80
OP-490039	Spout O-Ring	- - -	$0.90
OP-490040	Bonnet Nut	- - -	$2.90
OP-490041	Springs & Seats	- - -	$1.50
OP-490042	Bell-Hub Lever Handle Screw	- - -	$1.40
OP-490043	Handle 1/8" Allen Screw	- - -	$0.90
OP-490044	Stem Extension	- - -	$5.10
OP-490045	Replacement Parts Kit	20	$111.20
OP-490051	1/2" NPT Shank Extension	100	$11.90
OP-490052	1/2" NPT Shank Extension for Side Spray	100	$11.90
OP-490055	Female 55/64" Thread Aerator – 0.5 GPM	- - -	$10.60
OP-490055-BN	Female 55/64" Thread Aerator – 0.5 GPM	- - -	$11.00
OP-490055-ORB	Female 55/64" Thread Aerator – 0.5 GPM	- - -	$12.90
OP-490056	Female 55/64" Thread Aerator – 1.0 GPM	- - -	$11.80
OP-490056-BN	Female 55/64" Thread Aerator – 1.0 GPM	- - -	$12.30
OP-490056-ORB	Female 55/64" Thread Aerator – 1.0 GPM	- - -	$14.00
OP-490057	Female 55/64" Thread Aerator – 1.5 GPM	- - -	$9.80
OP-490057-BN	Female 55/64" Thread Aerator – 1.5 GPM	- - -	$11.80
OP-490057-ORB	Female 55/64" Thread Aerator – 1.5 GPM	- - -	$12.30
OP-490058	Male 15/16" Thread Aerator – 1.0 GPM	- - -	$9.80
OP-490058-BN	Male 15/16" Thread Aerator – 1.0 GPM	- - -	$11.00
OP-490058-ORB	Male 15/16" Thread Aerator – 1.0 GPM	- - -	$12.90
OP-490059	Male 15/16" Thread Aerator – 0.5 GPM	- - -	$9.80
OP-490059-BN	Male 15/16" Thread Aerator – 0.5 GPM	- - -	$11.00
OP-490059-ORB	Male 15/16" Thread Aerator – 0.5 GPM	- - -	$12.90
OP-490060	Female 55/64" Thread Aerator – 1.0 GPM	- - -	$12.30
OP-490060-BN	Female 55/64" Thread Aerator – 1.0 GPM	- - -	$13.40
OP-490060-ORB	Female 55/64" Thread Aerator – 1.0 GPM	- - -	$14.50
OP-490061	Female 55/64" Thread Aerator – 0.5 GPM	- - -	$12.30

PARTS

PART #	DESCRIPTION	PCS/ CS	LIST PRICE
OP-490061-BN	Female 55/64" Thread Aerator – 0.5 GPM	- - -	$13.40
OP-490061-ORB	Female 55/64" Thread Aerator – 0.5 GPM	- - -	$14.50
OP-490062	Male 13/16" Thread Aerator and Aerator Tool – 1.2 GPM	- - -	$7.90
OP-490063	Male 13/16" Thread Aerator – 1.2 GPM	- - -	$6.90
OP-490064	Female 55/64" Thread Aerator – 1.2 GPM	- - -	$7.70
OP-490065	Male 15/16" Thread Aerator – 1.2 GPM	- - -	$6.90
OP-520001	Mounting Hardware	- - -	$2.00
OP-520002	Mounting Hardware	- - -	$2.70
OP-520003	Mounting Hardware	- - -	$3.60
OP-520004	Locknut	- - -	$3.40
OP-520005	Mounting Kit	- - -	$4.70
OP-520006	1-Hole Mounting Assembly	- - -	$12.90
OP-520007	Mounting Tool	- - -	$4.70
OP-520008	Mounting Tool	- - -	$20.90
OP-520009	Mounting Hardware With Extra Washer	- - -	$3.80
OP-520012	Mounting Tool	- - -	$5.60
OP-520015	Locknut With Two Screws	- - -	$5.40
OP-530001	Mounting Hardware	- - -	$3.60
OP-530003	Pop-Up Mounting Kit	- - -	$5.40
OP-530004	Pop-Up Mounting Kit	- - -	$3.70
OP-530005	Mounting Kit	- - -	$5.60
OP-540004	Valve Mounting Kit	- - -	$9.90
OP-540005	Shank Mounting Kit	- - -	$10.20
OP-540006	Shank	- - -	$20.90
OP-560001	Mounting Kit	- - -	$2.20
OP-590001	Brass Supply Nut	- - -	$1.50
OP-590002	Valve Mounting Hardware	- - -	$6.60
OP-590003	Mounting Hardware	- - -	$2.90
OP-630001	Brass Grid Strainer Drain Assembly	50	$30.50
OP-630002	Brass Pop-Up Drain Assembly	50	$29.90
OP-630002-BN	Brass Pop-Up Drain Assembly	50	$33.60
OP-630002-ORB	Brass Pop-Up Drain Assembly	50	$34.40
OP-630004	50/50 Pop-Up Drain Assembly	50	$24.30
OP-630004-BN	50/50 Pop-Up Drain Assembly	50	$27.00
OP-630004-ORB	50/50 Pop-Up Drain Assembly	50	$27.90
OP-630005	50/50 Pop-Up Drain Assembly	- - -	$29.60
OP-630006	Brass Pop-Up Drain Assembly	- - -	$32.00
OP-630007	Push-Down Drain With Overflow	- - -	$30.80
OP-630008	50/50 Pop-Up Drain Assembly	- - -	$38.60
OP-630009	Brass Pop-Up Drain Assembly	- - -	$44.10
OP-640001	Shower Arm Flange	- - -	$1.50
OP-640002	6" Shower Arm	- - -	$13.10
OP-640007	Combo Diverter Tub Spout	50	$22.60
OP-640008	Tub Spout Escutcheon	- - -	$10.80
OP-640014	1/2" IPS Tub Spout	50	$11.80
OP-640014-BN	1/2" IPS Tub Spout	50	$18.70
OP-640015	1/2" IPS Diverter Tub Spout	50	$17.40
OP-640015-BN	1/2" IPS Diverter Tub Spout	50	$24.00
OP-640017	Renovation Faceplate	60	$73.10
OP-640017-BN	Renovation Faceplate	60	$111.80
OP-640017-ORB	Renovation Faceplate	60	$114.10
OP-640018	Combo Diverter Tub Spout	50	$22.00
OP-640018-BN	Combo Diverter Tub Spout	50	$28.70
OP-640018-ORB	Combo Diverter Tub Spout	50	$31.20
OP-640019	Combo Tub Spout	50	$15.90
OP-640019-BN	Combo Tub Spout	50	$25.10

PART #	DESCRIPTION	PCS/ CS	LIST PRICE
OP-640019-ORB	Combo Tub Spout	50	$26.80
OP-640020	8" Shower Arm	- - -	$14.40
OP-640022	Three-Function Pulsating Showerhead	100	$24.50
OP-640022-BN	Three-Function Pulsating Showerhead	100	$37.20
OP-640022-ORB	Three-Function Pulsating Showerhead	100	$39.40
OP-640029	Three-Function Pulsating Showerhead	50	$29.00
OP-640029-BN	Three-Function Pulsating Showerhead	50	$41.00
OP-640029-ORB	Three-Function Pulsating Showerhead	50	$44.30
OP-640031	Single-Function Standard Showerhead	200	$13.20
OP-640033	Extended Combo Diverter Tub Spout	25	$45.50
OP-640033-BN	Extended Combo Diverter Tub Spout	25	$62.50
OP-640034	Extended Combo Tub Spout	25	$37.20
OP-640034-BN	Extended Combo Tub Spout	25	$53.50
OP-640035	Four-Function Showerhead	70	$37.20
OP-640035-BN	Four-Function Showerhead	70	$45.50
OP-640035-ORB	Four-Function Showerhead	70	$49.40
OP-640037	Single-Function Rain Showerhead	- - -	$58.40
OP-640037-BN	Single-Function Rain Showerhead	- - -	$66.30
OP-640038	Single-Function Showerhead	48	$33.10
OP-640039	Single-Function Showerhead	48	$35.20
OP-640040	Extended i2 Combo Diverter Tub Spout	- - -	$60.60
OP-640040-BN	Extended i2 Combo Diverter Tub Spout	- - -	$68.80
OP-640041	Three-Function Showerhead	- - -	$54.60
OP-640042	Single-Function Square Showerhead	- - -	$57.40
OP-640043	Extended i3 Combo Diverter Tub Spout	- - -	$98.10
OP-640044	Extended i3 Combo Tub Spout	- - -	$99.10
OP-640045	Shower Arm Flange	- - -	$17.10
OP-640046	Combo Diverter Tub Spout	- - -	$25.40
OP-640047	Single-Function Rain Showerhead	- - -	$59.00
OP-640048	Single-Function Standard Showerhead	- - -	$23.20
OP-640053	Single-Function Standard Showerhead	- - -	$26.80
OP-640058	Cone Gasket	- - -	$1.20
OP-660002	Five-Function Handheld Showerhead – 1.5 GPM	- - -	$42.80
OP-660003	Five-Function Handheld Showerhead – 1.75 GPM	- - -	$38.30
OP-660005	Five-Function Handheld Showerhead With Non-Positive Shut Off – 1.5 GPM	- - -	$47.40
OP-660007	Three-Function Handheld Showerhead With Non-Positive/Shut Off – 1.75 GPM	- - -	$38.60
OP-660009	Three-Function Handheld Showerhead With Non-Positive Shut Off – 1.5 GPM	- - -	$48.90

TERMS & CONDITIONS

PAYMENT TERMS

Net 30 days for all accounts in good standing. 1.5% per month interest on all past due balances. Should any invoice be held in question, the balance not in question must be paid within the previously mentioned terms.

ORDERS

Minimum orders $100 net.

BACKORDERS

Backorders will be shipped unless otherwise notified by customer.

SALES TAX

All merchandise is sold to customers for resale. Customers assume full responsibility for all taxes or other assessments imposed by any government agency. All customers must furnish Olympia Faucets a valid resale or tax exemption number.

RETURNS

Product MAY NOT be returned without prior inspection and written authorization from a Olympia Faucet, Inc. sales representative. An approved Returned Goods Authorization must accompany all returns. A handling charge of 50% will be assessed against any returned product without prior authorization. Credits will be issued based on the established purchase price less any applicable transportation, handling and restocking charges. Returns of discontinued products or products in non-resalable condition are not accepted and will be issued credit at scrap value only. Credits must be taken within six months of date of issue.

CLAIMS

All claims for shortages must be made within 3 days of receipt of shipment. Olympia shall be held blameless in any claim of injury during installation of Olympia merchandise.

PRICES

Prices are subject to change without notice.

MODELS

Olympia may, at its discretion, discontinue, modify or change any product listed in its catalog Without prior notice.

FREIGHT

All goods are sold F.O.B. Commerce, California or F.O.B. Antioch, Tennessee. Freight will be prepaid on orders of $1,000 net or more to all 48 contiguous states. Prepaid orders from customers not within 48 contiguous states will be shipped prepaid to any port or border destination within the 48 contiguous states. We reserve the right to ship via the most cost-effective route.

SALES POLICY

Possession of this catalog does not constitute an offer to sell.

DISCLAIMER

Any and all references to trade names and/or trademarks in this catalog shall not be construed to be an endorsement by such manufacturer.

COMMERCIAL

CENTRAL BRASS

KITCHEN

PRE-RINSE FAUCETS

MODEL#	FINISH	DESCRIPTION	CASE	PRICE
0047-ULE60	Chrome	• Two-Handle Wall Mount Pre-Rinse Faucet • 18" Quick-Install Riser With Spring Guide, 44" Flexible Stainless-Steel Hose • Quick Pression 1/4 Turn Stems, Replaceable Seats • Backflow Preventers • 1/2-14 NPT Female Thread • 1.1 GPM Flow Rate Pre-Rinse Spray Valve • 2-Hole 7-7/8" to 8-1/8" Installation • Pipe Strap & Hook Assembly	4	$482.80
80047-ULE60	Chrome	• Ceramic Discs	4	$492.30
THE SAME AS 0047-ULE60 WITH:				
0047-ULE60-AD0	Chrome	• Secondary Control Valve • Add-On Faucet • 6" Swivel Tube Spout • 1.5 GPM Flow Rate	4	$565.40
0047-ULE60-AD1	Chrome	• Secondary Control Valve • Add-On Faucet • 8" Swivel Tube Spout • 1.5 GPM Flow Rate	4	$574.70
80047-ULE60-AD0	Chrome	• Secondary Control Valve • Add-On Faucet • 6" Swivel Tube Spout • Ceramic Disk Cartridges • 1.5 GPM Flow Rate	4	$625.70
80047-ULE60-AD1	Chrome	• Secondary Control Valve • Add-On Faucet • 8" Swivel Tube Spout • Ceramic Disk Cartridges • 1.5 GPM Flow Rate	4	$623.60
80047-ULE60-AD3	Chrome	• Secondary Control Valve • Add-On Faucet • 12" Swivel Tube Spout • Ceramic Disk Cartridges • 1.5 GPM Flow Rate	4	$618.10
80047-ULE60-AD23	Chrome	• Secondary Control Valve • Add-On Faucet • 18" Swivel Tube Spout • Ceramic Disk Cartridges • 1.5 GPM Flow Rate	4	$638.10

80047-ULE62-AD1	Chrome	• Two-Handle Wall Mount Pre-Rinse Faucet • Ceramic Disc Catridge • Back Flow Preventers • 1/2-14 NPT Female Thread • 1.1 GPM Flow Rate Pre-Rinse Spray Valve • 2-Hole 7-7/8" to 8-1/8" Installation • Pipe Strap and Hook Assembly • Add-On Faucet With 8" Tube Swivel Spout With 1.5 GPM Flow Rate	4	$607.92

PRE-RINSE FAUCETS

		MODEL#	FINISH	DESCRIPTION	CASE	PRICE
	CA	0640	Chrome	• Pre-Rinse Assembly • 44" Flexible Stainless-Steel Hose • Quick Install Adapters to Retrofit on T&S, Chicago Faucets and Fisher • 1.1 GPM Flow Rate Pre-Rinse Spray Valve • Pipe Strap & Hook Assembly	4	$392.90
	CA	0641	Chrome	• Pre-Rinse Assembly • 26" Flexible Stainless-Steel Hose • Quick Install Adapters to Retrofit on T&S, Chicago Faucets and Fisher • 1.1 GPM Flow Rate Pre-Rinse Spray Valve • Pipe Strap & Hook Assembly	4	$399.00

KITCHEN

PRE-RINSE FAUCETS

		MODEL#	FINISH	DESCRIPTION	CASE	PRICE
	CA	0642-LE0	Chrome	• Add-On Faucet • 6" Reach Tube Swivel Spout • 1.5 GPM Flow Rate	6	$125.60
		80642-LE0	Chrome	• Add-On Faucet • 2-3/8" Lever Handle • 6" Reach Tube Swivel Spout • Ceramic Discs	6	$144.10
		80642-LE1	Chrome	• Add-On Faucet • 2-3/8" Lever Handle • 8" Reach Tube Swivel Spout • Ceramic Discs	6	$159.40

PRE-RINSE FAUCET ACCESSORIES

		MODEL#	FINISH	DESCRIPTION	CASE	PRICE
		CS-19007C	Chrome	• Lever Handle With Vandal-Proof Screw – Cold	- - -	$15.10
		CS-19007H	Chrome	• Lever Handle With Vandal-Proof Screw – Hot	- - -	$15.10
		CS-42005	Chrome	• Pre-Rinse Spray • Integrated Stainless-Steel Clip to Hold Handle Open • One-Piece Stainless Steel Nozzle • Rubber Nozzle Bumper • Serviceable Components • Chrome Plate Handle With PVC Coating for Heat Resistance • Brass Valve Stem With Stainless-Steel Spring • 1.6 GPM Flow Rate	16	$87.10
		CS-42006	Chrome	• Pre-Rinse Spray • Integrated Stainless-Steel Clip to Hold Handle Open • One-Piece Stainless Steel Nozzle • Rubber Nozzle Bumper • Serviceable Components • Chrome Plate Handle With PVC Coating for Heat Resistance • Brass Valve Stem With Stainless-Steel Spring • 1.1 GPM Flow Rate, 6.5 oz Spray Force	16	$87.10
 Shown With CS-42011 Adapter		0660	Chrome	• Waste Drain Valve • 2" Drain, Optional Adapter Available for 1-1/2" Drain • Twist Handle With Heat-Resistant Plastic Grip • 3-1/2" Snap-In Removable Strainer • Overflow Outlet & Cap	6	$109.20

PRE-RINSE FAUCET ACCESSORIES

	MODEL#	FINISH	DESCRIPTION	CASE	PRICE
Shown With CS-42011 Adapter	**0661**	Chrome	• Waste Drain Valve • 2" Drain, Optional Adapter Available for 1-1/2" Drain • Lever Handle With Heat-Resistant Plastic Grip • 3-1/2" Snap-In Removable Strainer • Overflow Outlet & Cap	6	$104.20
	CS-42010		• Spray Repair Kit	- - -	$14.10
	CS-42013		• 44" Flexible Stainless-Steel Hose	- - -	$85.40
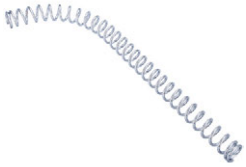	**CS-42014**	Chrome	• Overhead Spring	- - -	$18.80
	CS-42017	Chrome	• Finger Hook & Screw	- - -	$9.90
	CS-42018	Chrome	• 12" Adjustable Wall Bracket	- - -	$36.20
	CS-42019	Chrome	• 24" Riser	- - -	$46.60

KITCHEN

SINGLE HANDLE KITCHEN FAUCETS

	MODEL#	FINISH	DESCRIPTION	CASE	PRICE
	0650-0	Chrome	• Single-Handle Kitchen Faucet • 6” Reach Tube Swivel Spout • 2-Hole 4” to 6” Installation • Easy-Install 30” Flex Supply Lines With 3/8” Connections • 1.5 GPM Flow Rate	6	$122.40

SUFFIX #				
2	10" Swivel Tube Spout With Aerator (SU-363-JA)	- - -	$40.60
3	12" Swivel Tube Spout With Aerator (SU-363-LA)	- - -	$44.80
4	14" Swivel Tube Spout With Aerator (SU-363-MA)	- - -	$45.50
8	7-1/4" Reach, High-Rise Swivel Spout With Aerator (SU-357-HSA)	- - -	$123.80
07	8-3/4" Swivel High-Rise Spout With Aerator (SU-357-WSA)	- - -	$114.10
17	4-3/32" Combo Rigid/Swivel Gooseneck Spout With Aerator (CS-22002)	- - -	$41.10
18	5-1/2" Combo Rigid/Swivel Gooseneck Spout With Aerator (CS-22003)	- - -	$45.00
KRA* KSA*	5-1/2" Rigid Gooseneck Spout With Aerator (SU-157-KRA) 5-1/2" Swivel Gooseneck Spout With Aerator (SU-157-KSA)	- - - - - -	$90.90 $94.10
ELS	4" Wrist Handles (G-4147-C,H) Color-Coded Indexes	- - -	$35.00
EL	6" Elbow Handles (G-4149-C,H) Color-Coded Indexes	- - -	$37.70
Q	Quick Pression 1/4 Turn Stem Assembly (G-454-EL,ER)	- - -	$11.90
TSA1	6-3/8" Swivel Tri-Arc Gooseneck Spout With Aerator (CS-22001)	- - -	$73.20
L2	Lever Handles-Indexes (CS-19002C,H)	- - -	$33.10
C2	Cross Handles-Indexes (CS-19004C,H)	- - -	$36.50
E1.0	1.0 GPM Flow Rate (CS-49011-Male Aerator/CS-49012-Female Aerator)	- - -	$4.00 / $4.50

*Obsolete once stock is depleted. Replace with Suffix 17, 18.

TWO HANDLE KITCHEN FAUCETS

	MODEL#	FINISH	DESCRIPTION	CASE	PRICE
	0122-LE1	Chrome	• Two-Handle Cast Brass Kitchen Faucet • 8” Reach Tube Swivel Spout • 2-Hole 8” Installation • 1.5 GPM Flow Rate	6	$141.50
	0120-A	Chrome	• Canopy Handles	6	$151.50
	0120-A3	Chrome	• Two-Handle Cast Brass Kitchen Faucet • 12” Reach Tube Swivel Spout • 2-Hole 8” Installation • 1.5 GPM Flow Rate	6	$170.40

KITCHEN

TWO HANDLE KITCHEN FAUCETS

	MODEL#	FINISH	DESCRIPTION	CASE	PRICE
	0123-LE1	Chrome	• Two-Handle Cast Brass Kitchen Faucet • 8" Reach Tube Swivel Spout • 4-Hole 8" Installation • Side-Spray Assembly • 1.5 GPM Flow Rate	6	$174.20
	0121-A	Chrome	• Canopy Handles	6	$164.40
	0122-LE6	Chrome	• Two-Handle Cast Brass Kitchen Faucet • 8" Reach D-Style Swivel Spout • 2-Hole 8" Installation • 1.5 GPM Flow Rate	6	$162.60
	0122-A	Chrome	• Canopy Handles	6	$166.40
	80122-A	Chrome	• Ceramic Disk Cartridges	6	$173.90
	80122-ELS17	Chrome	• 4" Wrist Handles • 4-3/32" Combo Rigid/Swivel Gooseneck Spout With Aerator	6	$212.60
	0123-LE6	Chrome	• Two-Handle Cast Brass Kitchen Faucet • 8" Reach D-Style Swivel Spout • 4-Hole 8" Installation • Side-Spray Assembly • 1.5 GPM Flow Rate	6	$175.80
	0123-A	Chrome	• Canopy Handles	6	$180.00
	80123-A	Chrome	• Ceramic Disk Cartridges	6	$192.20

SUFFIX #				
	2	10" Swivel Tube Spout With Aerator (SU-363-JA)	- - -	$40.60
	3	12" Swivel Tube Spout With Aerator (SU-363-LA)	- - -	$44.80
	4	14" Swivel Tube Spout With Aerator (SU-363-MA)	- - -	$45.50
	8	7-1/4" Reach, High-Rise Swivel Spout With Aerator (SU-357-HSA)	- - -	$123.80
	07	8-3/4" Swivel High-Rise Spout With Aerator (SU-357-WSA)	- - -	$114.10
	17	4-3/32" Combo Rigid/Swivel Gooseneck Spout With Aerator (CS-22002)	- - -	$41.10
	18	5-1/2" Combo Rigid/Swivel Gooseneck Spout With Aerator (CS-22003)	- - -	$45.00
	19	8" Combo Rigid/Swivel Gooseneck Spout With Aerator (CS-22007)	- - -	$49.00
	ELS	4" Wrist Handles (G-4147-C,H) Color-Coded Indexes	- - -	$35.00
	EL	6" Elbow Handles (G-4149-C,H) Color-Coded Indexes	- - -	$37.70
	Q	Quick Pression 1/4 Turn Stem Assembly (G-454-EL,ER)	- - -	$11.90
	TSA1	6-3/8" Swivel Tri-Arc Gooseneck Spout With Aerator (CS-22001)	- - -	$73.20
	L2	Lever Handles–Indexes (CS-19002C,H)	- - -	$33.10
	C2	Cross Handles–Indexes (CS-19004C,H)	- - -	$36.50
	E1.0	1.0 GPM Flow Rate (CS-49011–Male Aerator/CS-49012–Female Aerator)	- - -	$4.00 / $4.50

KITCHEN

TWO HANDLE KITCHEN FAUCETS

	MODEL#	FINISH	DESCRIPTION	CASE	PRICE
	0122-ELS17	Chrome	• Two-Handle Cast Brass Kitchen Faucet • 4-3/32" Reach Gooseneck Rigid/Swivel Spout • 2-Hole 8" Installation • 1.5 GPM Flow Rate	6	$202.00
	0127-LE1	Chrome	• Two-Handle Cast Brass Kitchen Faucet • 8" Reach Tube Swivel Spout • 2-Hole 6" Installation • 1.5 GPM Flow Rate	6	$151.20
	0125-A	Chrome	• Canopy Handles	6	$144.40
	0128-LE1	Chrome	• Two-Handle Cast Brass Kitchen Faucet • 8" Reach Tube Swivel Spout • 4-Hole 6" Installation • Side-Spray Assembly • 1.5 GPM Flow Rate	6	$168.00
	0126-A	Chrome	• Canopy Handles	6	$163.10
	0127-LE6	Chrome	• Two-Handle Cast Brass Kitchen Faucet • 8" Reach D-Style Swivel Spout • 2-Hole 6" Installation • 1.5 GPM Flow Rate	6	$170.80
	0127-A	Chrome	• Canopy Handles	6	$162.60
	0128-LE6	Chrome	• Two-Handle Cast Brass Kitchen Faucet • 8" Reach D-Style Swivel Spout • 4-Hole 6" Installation • Side-Spray Assembly • 1.5 GPM Flow Rate	6	$187.60
	0128-A	Chrome	• Canopy Handles	6	$180.70

SUFFIX #				
	2	10" Swivel Tube Spout With Aerator (SU-363-JA)	- - -	$40.60
	3	12" Swivel Tube Spout With Aerator (SU-363-LA)	- - -	$44.80
	4	14" Swivel Tube Spout With Aerator(SU-363-MA)	- - -	$45.50
	8	7-1/4" Reach, High-Rise Swivel Spout With Aerator (SU-357-HSA)	- - -	$123.80

KITCHEN

TWO HANDLE KITCHEN FAUCETS

	MODEL#	FINISH	DESCRIPTION	CASE	PRICE
	1172-LE6-Q	Chrome	• Two-Handle Concealed Ledge Kitchen Faucet • 8” Reach D-Style Swivel Spout • Quick Pression 1/4 Turn Stems, Replaceable Seats • 3-Hole 6” to 24” Installation • 1.5 GPM Flow Rate	6	$180.40
	1173-LE6-Q	Chrome	• Two-Handle Concealed Ledge Kitchen Faucet • 8” Reach D-Style Swivel Spout • Quick Pression 1/4 Turn Stems, Replaceable Seats • 4-Hole 6” to 24” Installation • Side-Spray Assembly • 1.5 GPM Flow Rate	6	$191.70

SUFFIX #				
	8	7-1/4" Reach, High-Rise Swivel Spout With Aerator (SU-357-HSA)	- - -	$123.80
	07	8-3/4" Swivel High-Rise Spout With Aerator (SU-357-WSA)	- - -	$114.10
	17	4-3/32" Combo Rigid/Swivel Gooseneck Spout With Aerator (CS-22002)	- - -	$41.10
	18	5-1/2" Combo Rigid/Swivel Gooseneck Spout With Aerator (CS-22003)	- - -	$45.00
	ELS	4" Wrist Handles (G-4147-C,H) Color-Coded Indexes	- - -	$35.00
	EL	6" Elbow Handles (G-4149-C,H) Color-Coded Indexes	- - -	$37.70
	TSA1	6-3/8" Swivel Tri-Arc Gooseneck Spout With Aerator (CS-22001)	- - -	$73.20
	L1	Widespread Lever Handles-Indexes (CS-19001C,H)	- - -	$35.40
	C1	Widespread Cross Handles-Indexes (CS-19003C,H)	- - -	$43.60
	E1.0	1.0 GPM Flow Rate (CS-49011-Male Aerator/CS-49012-Female Aerator)	- - -	$4.00 / $4.50

	1172-ELS19	Chrome	• Two-Handle Concealed Ledge Kitchen Faucet • 8-1/16" Reach Gooseneck Rigid/Swivel Spout • Quick Pression 1/4 Turn Stems, Replaceable Seats • 3-Hole 6" to 24" Installation • 1.5 GPM Flow Rate	6	$230.90
	1172-ELS18	Chrome	• 5-1/2” Reach Gooseneck Rigid/Swivel Spout	6	$222.90
	1172-ELS17	Chrome	• 4-3/32” Reach Gooseneck Rigid/Swivel Spout	6	$214.20
	1172-ELS17-E0.5	Chrome	• 4-3/32” Reach Gooseneck Rigid/Swivel Spout • 0.5 GPM Flow Rate	6	$223.30
	0072-ELS17	Chrome	• Two-Handle Concealed Ledge Kitchen Faucet • 4-3/32" Reach Gooseneck Rigid/Swivel Spout • Quick Pression 1/4 Turn Stems, Replaceable Seats • 3-Hole 8" Installation • 1.5 GPM Flow Rate	6	$213.00
	0072-ELS19	Chrome	• 8-1/16" Reach Gooseneck Rigid/Swivel Spout	6	$230.90

KITCHEN

WALL MOUNT/LEDGE KITCHEN FAUCETS

	MODEL#	FINISH	DESCRIPTION	CASE	PRICE
	0045-LE0	Chrome	• Two-Handle Ledge Kitchen Faucet • 2-3/8" Lever Handle • 6" Reach Tube Swivel Spout • 1/2-14 NPT Female Thread • Quick Pression 1/4 Turn Stems, Replaceable Seats • 2-Hole 8" Installation • 1.5 GPM Flow Rate	6	$241.20
	0047-TA	Chrome	• Two-Handle Wall Mount Kitchen Faucet • 6" Reach Tube Swivel Spout • Quick Pression 1/4 Turn Stems, Replaceable Seats • 2-Hole 7-7/8" to 8-1/8" Installation • 1.5 GPM Flow Rate	6	$137.60
	0047-TA1	Chrome	• Two-Handle Wall Mount Kitchen Faucet • 8" Reach Tube Swivel Spout • Quick Pression 1/4 Turn Stems, Replaceable Seats • 2-Hole 7-7/8" to 8-1/8" Installation • 1.5 GPM Flow Rate	6	$145.30
	0047-TA3	Chrome	• Two-Handle Wall Mount Kitchen Faucet • 12" Reach Tube Swivel Spout • Quick Pression 1/4 Turn Stems, Replaceable Seats • 2-Hole 7-7/8" to 8-1/8" Installation • 1.5 GPM Flow Rate	6	$157.00
	0047-TLE0	Chrome	• Two-Handle Wall Mount Kitchen Faucet • 6" Reach Tube Swivel Spout • Quick Pression 1/4 Turn Stems, Replaceable Seats • 2-Hole 7-7/8" to 8-1/8" Installation • 1.5 GPM Flow Rate	6	$138.40
	80047-TLE0	Chrome	• Ceramic Disk Cartridges	6	$150.70
	0047-SLE0	Chrome	• Same as 0047 With 1/2-14 NPS Female Thread • 2-Hole 6-1/2 to 9-1/2" Installation • 2-3/8" Lever Handles	6	$138.40
	0047-SA	Chrome	• Canopy Handles	6	$141.60
	0047-SL	Chrome	• Canopy Handles	6	$129.30
	0047-UA	Chrome	• Two-Handle Wall Mount Kitchen Faucet • 6" Reach Tube Swivel Spout • Quick Pression 1/4 Turn Stems, Replaceable Seats • 2-Hole 7-7/8" to 8-1/8" Installation • 1.5 GPM Flow Rate	6	$142.10
	80047-UA	Chrome	• Ceramic Disk Cartridges • Canopy Handles	6	$157.70
	0047-UA1	Chrome	• Two-Handle Wall Mount Kitchen Faucet • 8" Reach Tube Swivel Spout • Quick Pression 1/4 Turn Stems, Replaceable Seats • 2-Hole 7-7/8" to 8-1/8" Installation • 1.5 GPM Flow Rate	6	$151.30

KITCHEN

WALL MOUNT/LEDGE KITCHEN FAUCETS

	MODEL#	FINISH	DESCRIPTION	CASE	PRICE
	0047-UA2	Chrome	• Two-Handle Wall Mount Kitchen Faucet • 10" Reach Tube Swivel Spout • Quick Pression 1/4 Turn Stems, Replaceable Seats • 2-Hole 7-7/8" to 8-1/8" Installation • 1.5 GPM Flow Rate	6	$155.20
	0047-UA4	Chrome	• Two-Handle Wall Mount Kitchen Faucet • 14" Reach Tube Swivel Spout • Quick Pression 1/4 Turn Stems, Replaceable Seats • 2-Hole 7-7/8" to 8-1/8" Installation • 1.5 GPM Flow Rate	6	$155.30
	0047-ULE0	Chrome	• Two-Handle Wall Mount Kitchen Faucet • 6" Reach Tube Swivel Spout • Quick Pression 1/4 Turn Stems, Replaceable Seats • 2-Hole 7-7/8" to 8-1/8" Installation • 1.5 GPM Flow Rate	6	$139.30
	0047-UA3	Chrome	• Canopy Handles	6	$161.00
	80047-UA3	Chrome	• Ceramic Disk Cartridges • Canopy Handles	6	$170.20

SUFFIX #				
	1	8" Swivel Tube Spout With Aerator (SU-363-RA)	- - -	$31.60
	2	10" Swivel Tube Spout With Aerator (SU-363-JA)	- - -	$40.60
	3	12" Swivel Tube Spout With Aerator (SU-363-LA)	- - -	$44.80
	4	14" Swivel Tube Spout With Aerator (SU-363-MA)	- - -	$45.50
	6	8" Swivel D-Style Spout With Aerator (SU-365-CA)	- - -	$55.50
	9	5" Swivel Cast Brass Spout With Aerator (SU-2923-A)	- - -	$76.40
	17	4-3/32" Combo Rigid/Swivel Gooseneck Spout With Aerator (CS-22002)	- - -	$41.10
	18	5-1/2" Combo Rigid/Swivel Gooseneck Spout With Aerator (CS-22003)	- - -	$45.00
	19	8" Combo Rigid/Swivel Gooseneck Spout With Aerator (CS-22007)	- - -	$49.00
	20	5-1/2" Rigid/Swivel Spout With Vacuum Breaker and Serrated Tip (CS-22008)	- - -	$86.40
	ELS	4" Wrist Handles (G-4147-C,H) Color-Coded Indexes	- - -	$35.00
	EL	6" Elbow Handles (G-4149-C,H) Color-Coded Indexes	- - -	$37.70
	Q	Quick Pression 1/4 Turn Stem Assembly (G-454-EL,ER)	- - -	$11.90
	E1.0	1.0 GPM Flow Rate (CS-49011-Male Aerator/CS-49012-Female Aerator)	- - -	$4.00 / $4.50

KITCHEN

WALL MOUNT/LEDGE KITCHEN FAUCETS

	MODEL#	FINISH	DESCRIPTION	CASE	PRICE
	0046-LE0	Chrome	• Two-Handle Ledge Kitchen Faucet • 6” Reach Tube Swivel Spout • Quick Pression 1/4 Turn Stems, Replaceable Seats • 2-Hole 8” Installation • Brass Soap Dish • 1.5 GPM Flow Rate	6	$245.20
	0048-TA	Chrome	• Two-Handle Wall Mount Kitchen Faucet • 6” Reach Tube Swivel Spout • Quick Pression 1/4 Turn Stems, Replaceable Seats • 2-Hole 7-7/8” to 8-1/8” Installation • Brass Soap Dish • 1.5 GPM Flow Rate	6	$155.80
	80048-TA	Chrome	• Ceramic Disk Cartridges • Canopy Handles	6	$158.90
	0048-TA1	Chrome	• Two-Handle Wall Mount Kitchen Faucet • 8” Reach Tube Swivel Spout • Quick Pression 1/4 Turn Stems, Replaceable Seats • 2-Hole 7-7/8” to 8-1/8” Installation • Brass Soap Dish • 1.5 GPM Flow Rate	6	$161.90
	0048-TA3	Chrome	• Two-Handle Wall Mount Kitchen Faucet • 12” Reach Tube Swivel Spout • Quick Pression 1/4 Turn Stems, Replaceable Seats • 2-Hole 7-7/8” to 8-1/8” Installation • Brass Soap Dish • 1.5 GPM Flow Rate	6	$169.00
	0048-TA4	Chrome	• Two-Handle Wall Mount Kitchen Faucet • 14” Reach Tube Swivel Spout • Quick Pression 1/4 Turn Stems, Replaceable Seats • 2-Hole 7-7/8” to 8-1/8” Installation • Brass Soap Dish • 1.5 GPM Flow Rate	6	$163.00

KITCHEN

WALL MOUNT/LEDGE KITCHEN FAUCETS

	MODEL#	FINISH	DESCRIPTION	CASE	PRICE
	0048-TLE0	Chrome	• Two-Handle Wall Mount Kitchen Faucet • 6" Reach Tube Swivel Spout • Quick Pression 1/4 Turn Stems, Replaceable Seats • 2-Hole 7-7/8" to 8-1/8" Installation • Brass Soap Dish • 1.5 GPM Flow Rate	6	$147.50
	0048-SA	Chrome	• Canopy Handles	6	$156.10
	0048-SLE0	Chrome	• Same as 0048 With 1/2-14 NPS Female Thread • 2-Hole 6-1/2" to 9-1/2" Installation • 2-3/8" Lever Handles	6	$163.90
	0048-UA	Chrome	• Two-Handle Wall Mount Kitchen Faucet • 6" Reach Tube Swivel Spout • Quick Pression 1/4 Turn Stems, Replaceable Seats • 2-Hole 7-7/8" to 8-1/8" Installation • Brass Soap Dish • 1.5 GPM Flow Rate	6	$167.00
	80048-UA	Chrome	• Ceramic Disk Cartridges • Canopy Handles	6	$170.30
	0048-UA1	Chrome	• Two-Handle Wall Mount Kitchen Faucet • 8" Reach Tube Swivel Spout • Quick Pression 1/4 Turn Stems, Replaceable Seats • 2-Hole 7-7/8" to 8-1/8" Installation • Brass Soap Dish • 1.5 GPM Flow Rate	6	$173.60
	0048-UA2	Chrome	• Two-Handle Wall Mount Kitchen Faucet • 10" Reach Tube Swivel Spout • Quick Pression 1/4 Turn Stems, Replaceable Seats • 2-Hole 7-7/8" to 8-1/8" Installation • Brass Soap Dish • 1.5 GPM Flow Rate	6	$174.10
	0048-UA6	Chrome	• Two-Handle Wall Mount Kitchen Faucet • 8" Reach D-Style Swivel Spout • Quick Pression 1/4 Turn Stems, Replaceable Seats • 2-Hole 7-7/8" to 8-1/8" Installation • Brass Soap Dish • 1.5 GPM Flow Rate	6	$174.70
	0048-ULE0	Chrome	• Two-Handle Wall Mount Kitchen Faucet • 6" Reach Tube Swivel Spout • Quick Pression 1/4 Turn Stems, Replaceable Seats • 2-Hole 7-7/8" to 8-1/8" Installation • Brass Soap Dish • 1.5 GPM Flow Rate	6	$161.70
	0048-UA3	Chrome	• Canopy Handles	6	$180.60

KITCHEN

WALL MOUNT/LEDGE KITCHEN FAUCETS

	MODEL#	FINISH	DESCRIPTION	CASE	PRICE
SUFFIX #	1		8" Swivel Tube Spout With Aerator (SU-363-RA)	- - -	$31.60
	2		10" Swivel Tube Spout With Aerator (SU-363-JA)	- - -	$40.60
	3		12" Swivel Tube Spout With Aerator (SU-363-LA)	- - -	$44.80
	4		14" Swivel Tube Spout With Aerator (SU-363-MA)	- - -	$45.50
	6		8" Swivel D-Style Spout With Aerator (SU-365-CA)	- - -	$55.50
	9		5" Swivel Cast Brass Spout With Aerator (SU-2923-A)	- - -	$76.40
	ELS		4" Wrist Handles (G-4147-C,H) Color-Coded Indexes	- - -	$35.00
	EL		6" Elbow Handles (G-4149-C,H) Color-Coded Indexes	- - -	$37.70
	Q		Quick Pression 1/4 Turn Stem Assembly (G-454-EL,ER)	- - -	$11.90
	E1.0		1.0 GPM Flow Rate (CS-49011-Male Aerator/CS-49012-Female Aerator)	- - -	$4.00 / $4.50

KITCHEN

POT FILLERS

		MODEL#	FINISH	DESCRIPTION	CASE	PRICE
		0398-ULE0	Chrome	• Wall Mount Pot Filler • 6" Reach Tube Swivel Spout • Quick Pression 1/4 Turn Stem With Replaceable Seat • 1-Hole Installation • Designed for Cold Water • 1.5 GPM Flow Rate	6	$85.20
		0398-ULEEX0	Chrome	• Wall Mount Pot Filler • 6" Reach Tube Swivel Spout With Double-Joint 7" Spout Extension • Quick Pression 1/4 Turn Stem With Replaceable Seat • 1-Hole Installation • Designed for Cold Water • 1.5 GPM Flow Rate	6	$103.30

SUFFIX #				
	1	8" Swivel Tube Spout With Aerator (SU-363-RA)	- - -	$31.60
	2	10" Swivel Tube Spout With Aerator (SU-363-JA)	- - -	$40.60
	3	12" Swivel Tube Spout With Aerator (SU-363-LA)	- - -	$44.80
	4	14" Swivel Tube Spout With Aerator (SU-363-MA)	- - -	$45.50
	6	8" Swivel D-Style Spout With Aerator (SU-365-CA)	- - -	$55.50
	07	8-3/4" Swivel High-Rise Spout With Aerator (SU-357-WSA)	- - -	$114.10
	8	7-1/4" Reach, High-Rise Swivel Spout With Aerator (SU-357-HSA)	- - -	$123.80
	9	5" Swivel Cast Brass Spout With Aerator (SU-2923-A)	- - -	$76.40
	13	16" Swivel Tube Spout With Aerator (CS-22004)	- - -	$45.00
	17	4-3/32" Combo Rigid/Swivel Gooseneck Spout With Aerator (CS-22002)	- - -	$41.10
	18	5-1/2" Combo Rigid/Swivel Gooseneck Spout With Aerator (CS-22003)	- - -	$45.00
	20	5-1/2" Rigid/Swivel Spout With Vacuum Breaker and Serrated Tip (CS-22008)	- - -	$86.40
	23	18" Swivel Tube Spout With Aerator (CS-22005)	- - -	$47.90
	F	Full Flow Streamer – Female (CS-49029)	- - -	$3.80

SERVICE SINKS

SERVICE SINK FAUCETS

	MODEL#	FINISH	DESCRIPTION	CASE	PRICE
	0050-ULERC	Rough Chrome	• Two-Handle Wall Mount Service Sink Faucet • 2-1/2" Reach Rigid Spout With Pail Hook, Hose Thread • Quick Pression 1/4 Turn Stems, Replaceable Seats • 2-Hole 7-7/8" to 8-1/8" Installation • Vacuum Breaker	6	$172.00
	0050-URC	Rough Chrome	• Canopy Handles	6	$167.00
	0050-URC-QI	Rough Chrome	• Two-Handle Wall Mount Service Sink Faucet • 2-1/2" Reach Rigid Spout With Pail Hook, Hose Thread • Quick Pression 1/4 Turn Stems, Replaceable Seats, Built-in Stops • 2-Hole 7-7/8" to 8-1/8" Installation • Vacuum Breaker	6	$191.50
	80050-U-I	Chrome	• Ceramic Disc Cartridges	6	$256.10
	0051-URC	Rough Chrome	• Two-Handle Wall Mount Service Sink Faucet • 2-1/2" Reach Rigid Spout With Pail Hook, Hose Thread • Quick Pression 1/4 Turn Stems, Replaceable Seats • 2-Hole 7-7/8" to 8-1/8" Installation	6	$137.00
	80051-ULERC	Rough Chrome	• Ceramic Discs	6	$142.20
	0054-ULE-Q	Chrome	• Two-Handle Wall Mount Service Sink Faucet • 5-3/4" Rigid Spout With Pail Hook and Top Brace to Wall With Flange, H • Quick Pression 1/4 Turn Stems, Replaceable Seats • 2-Hole 7-7/8" to 8-1/8" Installation • Vacuum Breaker	6	$210.00
	0054-ULE-QI	Chrome	• Built-in Stops	6	$258.90
	0054-U-QI	Chrome	• Canopy Handles	6	$255.70
	0054-URC-QI	Rough Chrome	• Two-Handle Wall Mount Service Sink Faucet • 5-3/4" Rigid Spout With Pail Hook and Top Brace to Wall With Flange, H • Quick Pression 1/4 Turn Stems, Replaceable Seats, Built-in Stops • 2-Hole 7-7/8" to 8-1/8" Installation • Vacuum Breaker	6	$205.70
	80054-U-I	Chrome	• Ceramic Disc Cartridges	6	$269.60
	0054-U-Q	Chrome	• Two-Handle Wall Mount Service Sink Faucet • 5-3/4" Rigid Spout With Pail Hook and Top Brace to Wall With Flange, H • Quick Pression 1/4 Turn Stems, Replaceable Seats • 2-Hole 7-7/8" to 8-1/8" Installation • Vacuum Breaker	6	$206.70
	0054-URC-Q	Rough Chrome		6	$185.70
	0054-YELSRC-Q	Rough Chrome	• Two-Handle Wall Mount Service Sink Faucet • 5-3/4" Rigid Spout With Pail Hook and Top Brace to Wall With Flange, H • Quick Pression 1/4 Turn Stems, Replaceable Seats • 2-Hole 3" to 13" Installation • Vacuum Breaker	6	$259.40

SERVICE SINKS

	MODEL#	DESCRIPTION	CASE	PRICE
SUFFIX #	ELS	4" Wrist Handles (G-4147-C,H) Color-Coded Indexes	- - -	$35.00
	EL	6" Elbow Handles (G-4149-C,H) Color-Coded Indexes	- - -	$37.70
	S	1/2-14 NPS Female Inlet Flanges (SU-2806) (Adjustable 6-1/2 to 9-1/2" Centers)	- - -	$55.50
	T	1/2-14 NPT Male Inlet Shank Flanges (SU-2846) (Adjustable 7-7/8 to 8-1/8" Centers)	- - -	$42.60
	YRC	1/2-14 NPS Female Inlet Flanges With Integral Stops (SU-2841-ARC) (Adjustable 3 to 13" Centers)	- - -	$89.20

SERVICE SINK ACCESSORIES

	MODEL#	FINISH	DESCRIPTION	CASE	PRICE
	CS-65002		• Hose Bracket • Stainless-Steel Construction • Spring Loaded Grip • 30" Heavy-Duty Rubber Hose With 3/4" Hose Thread Connection • Mounting Hardware Included	24	$49.00
	CS-65001		• Stainless-Steel Mop Hanger • Stainless-Steel Construction • Spring Loaded Grips • Mounting Hardware Included	24	$66.50
Easy Install Adapter for Models 0047, 0048, 0050, 0051, 0054	CS-42002	Chrome	• Easy Install Adapter for Chicago Faucet to Central Brass	100	$38.70
	CS-42003	Chrome	• Easy Install Adapter for T & S Faucet to Central Brass	100	$35.00
	CS-42004	Chrome	• Easy Install Adapter for Fisher Faucet to Central Brass	100	$43.80

LABORATORY

LABORATORY FAUCETS

	MODEL#	FINISH	DESCRIPTION	CASE	PRICE
	0047-ULE20	Chrome	· Two-Handle Wall Mount Laboratory Faucet · 5-1/2" Reach Rigid/Swivel Spout · Quick Pression 1/4 Turn Stems, Replaceable Seats · 2-Hole 7-7/8" to 8-1/8" Installation · 0.5 GPM Flow Rate · Vacuum Breaker · Serrated Tip	- - -	$199.40
	0280-LE20	Chrome	· Single-Handle Laboratory Faucet · 5-1/2" Reach Rigid/Swivel Spout · Quick Pression 1/4 Turn Stem With Replaceable Seat · 1-Hole Installation · 0.5 GPM Flow Rate · Vacuum Breaker · Serrated Tip	- - -	$136.30
	0287-LE20	Chrome	· Two-Handle Laboratory Faucet · 5-1/2" Reach Rigid/Swivel Spout · Quick Pression 1/4 Turn Stems, Replaceable Seats · 1-Hole Installation · Easy-Install 30" Flex Supply Lines With 3/8" Connections · Vacuum Breaker · Serrated Tip · 0.5 GPM Flow Rate	- - -	$177.00
	0398-ULE20	Chrome	· Wall Mount Laboratory Faucet · 5-1/2" Reach Rigid/Swivel Spout · Quick Pression 1/4 Turn Stem With Replaceable Seat · 1-Hole Installation · Designed for Cold Water · Vacuum Breaker · Serrated Tip · 0.5 GPM Flow Rate	- - -	$143.30

BAR

GLASS FILLERS

		MODEL#	FINISH	DESCRIPTION	CASE	PRICE
	✓	0393	Chrome	• Glass Filler • 2-3/4" Reach Gooseneck Rigid Spout • 1-Hole Installation	6	$89.20
		0396	Chrome	• Glass Filler • 3/8-18 NPT Male Inlet With Flange • 1-Hole Installation • 2.78 GPM @ 60 PSI	6	$124.50
		0397	Chrome	• Glass Filler • 1/2-14 NPS Male Inlet With Flange • 1-Hole Installation • 2.78 GPM @ 60 PSI	10	$143.50

BAR

SINGLE HANDLE BAR FAUCETS

	MODEL#	FINISH	DESCRIPTION	CASE	PRICE
	0280-AC	Chrome	• Single-Handle Bar Faucet • 5" Reach Cast-Brass Spout • Quick Pression 1/4 Turn Stem With Replaceable Seat • 1-Hole Installation • 1.5 GPM Flow Rate	6	$111.40
	0280-AH	Chrome	• Single-Handle Bar Faucet • 5" Reach Cast-Brass Spout • Quick Pression 1/4 Turn Stem With Replaceable Seat • 1-Hole Installation • 1.5 GPM Flow Rate	6	$111.40
	0280-AC17	Chrome	• Single-Handle Bar Faucet • 4-3/32" Reach Gooseneck Rigid/Swivel Spout • Quick Pression 1/4 Turn Stem With Replaceable Seat • 1-Hole Installation • 1.5 GPM Flow Rate	6	$121.30
	0280-ELS19	Chrome	• Single-Handle Bar Faucet • 8-1/16" Reach Gooseneck Rigid/Swivel Spout • Quick Pression 1/4 Turn Stem With Replaceable Seat • 1-Hole Installation • 1.5 GPM Flow Rate	6	$223.60
	0286-AC	Chrome	• Single-Handle Bar Faucet • 4-11/16" Reach Gooseneck Rigid Spout • Quick Pression 1/4 Turn Stem With Replaceable Seat • 1-Hole Installation • 1.5 GPM Flow Rate	6	$84.70
	0286-AH	Chrome		6	$83.90
	80286-AC	Chrome		6	$93.10
	0281-AC	Chrome	• Single-Handle Bar Faucet • 4-5/16" Reach Gooseneck Rigid Spout • Quick Pression 1/4 Turn Stem With Replaceable Seat • 1-Hole Installation • 1.5 GPM Flow Rate	6	$96.30
	0281-AH	Chrome		6	$96.30

BAR

SINGLE HANDLE BAR FAUCETS

	MODEL#	FINISH	DESCRIPTION	CASE	PRICE
	0282	Chrome	• Single-Handle Dishwasher Faucet • 2-13/16" Reach Rigid Spout • Quick Pression 1/4 Turn Stem With Replaceable Seat • 1-Hole Installation	6	$87.10
	0284-A-Q	Chrome	• Two-Handle Bar & Pantry Faucet • 5-1/8" Reach Gooseneck Rigid Spout • Quick Pression 1/4 Turn Stems, Replaceable Seats • 1-Hole Installation • Easy-Install 30" Flex Supply Lines With 3/8" Connections • 1.5 GPM Flow Rate	6	$169.00
	0285-A-Q	Chrome	• Two-Handle Bar & Pantry Faucet • 5-1/2" Reach Gooseneck Swivel Spout • Quick Pression 1/4 Turn Stems, Replaceable Seats • 1-Hole Installation • Easy-Install 30" Flex Supply Lines With 3/8" Connections • 1.5 GPM Flow Rate	6	$183.40
	0287-LE17	Chrome	• Two-Handle Bar & Pantry Faucet • 4-3/32" Reach Gooseneck Rigid/Swivel Spout • Quick Pression 1/4 Turn Stems, Replaceable Seats • 1-Hole Installation • Easy-Install 30" Flex Supply Lines With 3/8" Connections • 1.5 GPM Flow Rate	6	$166.80
	0287-ELS17	Chrome	• 4" Wrist Handles • 4-3/32" Combo Rigid/Swivel Gooseneck Spout With Aerator	6	$194.40
	0287-A17	Chrome	• Canopy Handles	6	$165.20
	0287-LE18	Chrome	• 5-1/2" Rigid/Swivel Spout	6	$168.90
	80287-A17	Chrome	• 1-1/16-14 NPS Male Thread • Ceramic Discs	6	$163.20
	0289-A	Chrome	• Two-Handle Bar Faucet • 3-15/16" Reach Gooseneck Rigid Spout • Quick Pression 1/4 Turn Stems, Replaceable Seats • 1-Hole Installation • Easy-Install 30" Flex Supply Lines With 3/8" Connections • 1.5 GPM Flow Rate	6	$148.40

BAR & LAUNDRY

TWO HANDLE BAR & LAUNDRY FAUCETS

	MODEL#	FINISH	DESCRIPTION	CASE	PRICE
	0084-LE0	Chrome	• Two-Handle Cast Brass Bar & Laundry Faucet • 6" Reach Tube Swivel Spout • 2- or 3-Hole 4" Installation • 1.5 GPM Flow Rate	6	$112.40
	0084-A	Chrome	• Canopy Handles	6	$110.20
	80084-A	Chrome	• Ceramic Disc Cartridges • Canopy Handles	6	$121.50
	0084-A6	Chrome	• Two-Handle Cast Brass Bar & Laundry Faucet • 8" Reach D-Style Swivel Spout • 2- or 3-Hole 4" Installation • 1.5 GPM Flow Rate	6	$121.20
	80084-AELS	Chrome	• Two-Handle Cast Brass Bar & Laundry Faucet • 6" Reach Tube Swivel Spout • 2- or 3-Hole 4" Installation • 1.5 GPM Flow Rate	6	$146.70
	0094-ELS17	Chrome	• Two-Handle Shell-Type Bar & Laundry Faucet • 4-3/32" Reach Gooseneck Rigid/Swivel Spout • 2- or 3-Hole 4" Installation • 1.5 GPM Flow Rate	6	$145.70
	0094-A17	Chrome	• Two-Handle Shell-Type Bar & Laundry Faucet • 4-3/32" Reach Gooseneck Rigid/Swivel Spout • 2- or 3-Hole 4" Installation • 1.5 GPM Flow Rate	6	$118.30
	0094-H	Chrome	• Two-Handle Shell-Type Bar & Laundry Faucet • 6" Reach Tube Swivel Spout, Hose Thread • 2- or 3-Hole 4" Installation	6	$99.60

BAR & LAUNDRY

TWO HANDLE BAR & LAUNDRY FAUCETS

	MODEL#	FINISH	DESCRIPTION	CASE	PRICE
	0094-H1	Chrome	• Two-Handle Shell-Type Bar & Laundry Faucet • 8" Reach Tube Swivel Spout, Hose Thread • 2- or 3-Hole 4" Installation	6	$105.70
	0094-LE0	Chrome	• Two-Handle Shell-Type Bar & Laundry Faucet • 6" Reach Tube Swivel Spout • 2- or 3-Hole 4" Installation • 1.5 GPM Flow Rate	6	$97.70
	0094-A	Chrome	• Canopy Handles	6	$99.00
	0084-LE17	Chrome	• Two-Handle Cast Brass Bar & Laundry Faucet • 4-3/32" Reach Gooseneck Rigid/Swivel Spout • 2- or 3-Hole 4" Installation • 1.5 GPM Flow Rate	6	$126.30
	0084-A17	Chrome	• Canopy Handles	6	$125.50
	80084-A17	Chrome	• Ceramic Disc Cartridges • Canopy Handles	6	$135.40
	80084-H	Chrome	• 6" Reach Tube Swivel Spout, Hose Thread	6	$109.96
	0084-EL17	Chrome	• Two-Handle Cast Brass Bar & Laundry Faucet • 4-3/32" Reach Gooseneck Rigid/Swivel Spout • 2- or 3-Hole 4" Installation • 1.5 GPM Flow Rate	6	$154.20
	0084-ELS17	Chrome	• Two-Handle Cast Brass Bar & Laundry Faucet • 4-3/32" Reach Gooseneck Rigid/Swivel Spout • 2- or 3-Hole 4" Installation • 1.5 GPM Flow Rate	6	$153.00
	0084-ELS17-E0.5	Chrome	• 0.5 GPM Flow Rate	6	$165.70
	80084-ELS17	Chrome	• Ceramic Disc Cartridges	6	$164.00

BAR & LAUNDRY

	MODEL#	FINISH DESCRIPTION	CASE	PRICE
SUFFIX #	1	8" Swivel Tube Spout With Aerator (SU-363-RA)	- - -	$31.60
	2	10" Swivel Tube Spout With Aerator (SU-363-JA)	- - -	$40.60
	3	12" Swivel Tube Spout With Aerator (SU-363-LA)	- - -	$44.80
	4	14" Swivel Tube Spout With Aerator (SU-363-MA)	- - -	$45.50
	6	8" Swivel D-Style Spout With Aerator (SU-365-CA)	- - -	$55.50
	8	7-1/4" Reach, High-Rise Swivel Spout With Aerator (SU-357-HSA)	- - -	$123.80
	17	4-3/32" Combo Rigid/Swivel Gooseneck Spout With Aerator (CS-22002)	- - -	$41.10
	18	5-1/2" Combo Rigid/Swivel Gooseneck Spout With Aerator (CS-22003)	- - -	$45.00
	19	8" Combo Rigid/Swivel Gooseneck Spout With Aerator (CS-22007)	- - -	$49.00
	20	5-1/2" Rigid/Swivel Spout With Vacuum Breaker and Serrated Tip (CS-22008)	- - -	$86.40
	ELS	4" Wrist Handles (G-4147-C,H) Color-Coded Indexes	- - -	$35.00
	EL	6" Elbow Handles (G-4149-C,H) Color-Coded Indexes	- - -	$37.70
	Q	Quick Pression 1/4 Turn Stem Assembly (G-454-EL,ER)	- - -	$11.90

LAUNDRY

TWO HANDLE LAUNDRY FAUCETS

	MODEL#	FINISH	DESCRIPTION	CASE	PRICE
	0465	Rough Brass	• Two-Handle Laundry Faucet • 6" Reach Tube Swivel Spout, Hose Thread • Quick Pression 1/4 Turn Stems, Replaceable Seats • 3-1/2" Centers • Straddle Legs	6	$91.40
	80465	Rough Brass	• Ceramic Disc Cartridges	6	$93.70
	0465-5	Rough Brass	• Two-Handle Laundry Faucet • 6" Reach Cast Swivel Spout, Hose Thread • Quick Pression 1/4 Turn Stems, Replaceable Seats • 3-1/2" Centers • Straddle Legs	6	$101.40
	0465-LE	Rough Brass	• Two-Handle Laundry Faucet • 6" Reach Tube Swivel Spout, Hose Thread • Quick Pression 1/4 Turn Stems, Replaceable Seats • 3-1/2" Centers • Straddle Legs	6	$91.40
	0466	Rough Brass	• Two-Handle Laundry Faucet • 6" Reach Tube Swivel Spout, Hose Thread • Quick Pression 1/4 Turn Stems, Replaceable Seats • 3-1/2" Centers • Straddle Legs	6	$76.80
	80466	Rough Brass	• Ceramic Disc Cartridges	6	$82.70
	0466-5	Rough Brass	• Two-Handle Laundry Faucet • 6" Reach Cast Swivel Spout, Hose Thread • Quick Pression 1/4 Turn Stems, Replaceable Seats • 3-1/2" Centers • Straddle Legs	6	$84.30
	0468	Rough Brass	• Two-Handle Laundry Faucet • 6" Reach Tube Swivel Spout, Hose Thread • Quick Pression 1/4 Turn Stems • 3-1/2" Centers • Extended Straddle Legs	6	$107.00

LAUNDRY

TWO HANDLE LAUNDRY FAUCETS

		MODEL#	FINISH	DESCRIPTION	CASE	PRICE
	♿	0469	Rough Brass	• Two-Handle Laundry Faucet • 6” Reach Tube Swivel Spout, Hose Thread • Quick Pression 1/4 Turn Stems • 3-1/2” Centers • Extended Hole Mount Legs	6	$110.50
	♿	0470	Rough Brass	• Two-Handle Laundry Faucet • 6” Reach Tube Swivel Spout, Hose Thread • Quick Pression 1/4 Turn Stems • 3-1/2” Centers • Offset Legs for Wall Mount	6	$107.00
SUFFIX #		5	6" Swivel Cast-Brass Spout With Hose End – Rough Brass (SU-2929-01)		- - -	$40.00
		0471-RC	Rough Chrome	• Two-Handle Laundry Faucet • 4-1/2” Reach Swivel Spout, Hose Thread • Quick Pression 1/4 Turn Stems, Replaceable Seats • 6” Centers	6	$158.90
	♿	0455	Chrome	• Wash Machine Filler • 1/2” IP or Copper Sweat Union Inlets • 8” Centers	8	$126.70

WORKBOARD

WORKBOARD SINK FAUCETS

		MODEL#	FINISH	DESCRIPTION	CASE	PRICE
		0184-LE0	Chrome	• Two-Handle Cast Brass Wall Mount Faucet • 6" Reach Tube Swivel Spout • 2-Hole 4" Installation • 1.5 GPM Flow Rate	6	$119.80
		0194-LE0	Chrome	• Two-Handle Shell-Type Wall Mount Faucet • 6" Reach Tube Swivel Spout • 2-Hole 4" Installation • 1.5 GPM Flow Rate	6	$102.10

SUFFIX #				
	1	8" Swivel Tube Spout With Aerator (SU-363-RA)	- - -	$31.60
	2	10" Swivel Tube Spout With Aerator (SU-363-JA)	- - -	$40.60
	3	12" Swivel Tube Spout With Aerator (SU-363-LA)	- - -	$44.80
	4	14" Swivel Tube Spout With Aerator (SU-363-MA)	- - -	$45.50
	6	8" Swivel D-Style Spout With Aerator (SU-365-CA)	- - -	$55.50
	8	5" Swivel Cast Brass Spout With Aerator (SU-2923-A)	- - -	$76.40
	17	4-3/32" Combo Rigid/Swivel Gooseneck Spout With Aerator (CS-22002)	- - -	$41.10
	18	5-1/2" Combo Rigid/Swivel Gooseneck Spout With Aerator (CS-22003)	- - -	$45.00
	ELS	4" Wrist Handles (G-4147-C,H) Color-Coded Indexes	- - -	$35.00
	EL	6" Elbow Handles (G-4149-C,H) Color-Coded Indexes	- - -	$37.70
	Q	Quick Pression 1/4 Turn Stem Assembly (G-454-EL,ER)	- - -	$11.90

BATHROOM

SINGLE HANDLE BATHROOM FAUCETS

	MODEL#	FINISH	DESCRIPTION	CASE	PRICE
	1960-A	Chrome	• Single-Handle Cast Brass Lavatory Faucet • Metal Lever Handle • 4-9/16" Reach, 2" From Deck to Aerator • 1/2-14 NPS Male Thread • Ceramic Disc Cartridge With Temperature Limit Cap • 3-Hole 4" Installation • 0.5 GPM Flow Rate	6	$138.30
	1960-A-E1.2	Chrome	• 1.2 GPM Flow Rate	6	$138.30
	1960-DA	Chrome	• Single-Handle Cast Brass Lavatory Faucet • Metal Lever Handle • 4-9/16" Reach, 2" From Deck to Aerator • 1/2-14 NPS Male Thread • Ceramic Disc Cartridge With Temperature Limit Cap • 3-Hole 4" Installation • Brass Pop-Up Drain Assembly • 0.5 GPM Flow Rate	6	$174.20
	1960-AEH	Chrome	• Single-Handle Cast Brass Lavatory Faucet • Metal Elbow Lever Handle • 4-9/16" Reach, 2" From Deck to Aerator • 1/2-14 NPS Male Thread • Ceramic Disc Cartridge With Temperature Limit Cap • 3-Hole 4" Installation • 0.5 GPM Flow Rate	6	$164.50
	1960-DAEH	Chrome	• Single-Handle Cast Brass Lavatory Faucet • Metal Elbow Lever Handle • 4-9/16" Reach, 2" From Deck to Aerator • 1/2-14 NPS Male Thread • Ceramic Disc Cartridge With Temperature Limit Cap • 3-Hole 4" Installation • Brass Pop-Up Drain Assembly • 0.5 GPM Flow Rate	6	$198.40

BATHROOM

TWO HANDLE BATHROOM FAUCETS

	MODEL#	FINISH	DESCRIPTION	CASE	PRICE
	1137-LE	Chrome	• Two-Handle Bathroom Faucet • Quick Pression 1/4 Turn Stems, Replaceable Seats • With Hole Cover • 1.2 GPM Flow Rate	6	$130.00
	1137-DLE	Chrome	• Brass Pop-Up Drain Assembly	6	$163.10
	1137-A	Chrome	• Canopy Handles	6	$133.10
	81137-A	Chrome	• Ceramic Disc Cartridges • Canopy Handles	6	$135.90
	1137-DA	Chrome	• Two-Handle Bathroom Faucet • Canopy Handles • Quick Pression 1/4 Turn Stems, Replaceable Seats • Brass Pop-Up Drain Assembly • 1.2 GPM Flow Rate	6	$169.40
	81137-DA	Chrome	• Ceramic Disc Cartridges • Canopy Handles	6	$174.80
	1137-DAEL	Chrome	• Two-Handle Bathroom Faucet • Quick Pression 1/4 Turn Stems, Replaceable Seats • Brass Pop-Up Drain Assembly • 1.2 GPM Flow Rate	6	$197.80
	1137-AELS	Chrome	• Two-Handle Bathroom Faucet • Quick Pression 1/4 Turn Stems, Replaceable Seats • With Hole Cover • 1.2 GPM Flow Rate	6	$152.30
	81137-AELS	Chrome	• Ceramic Disc Cartridges	6	$156.50
	1137-DAELS	Chrome	• Two-Handle Bathroom Faucet • Quick Pression 1/4 Turn Stems, Replaceable Seats • Brass Pop-Up Drain Assembly • 1.2 GPM Flow Rate	6	$183.70
	81137-DAELS	Chrome	• Ceramic Disc Cartridges	6	$201.10
SUFFIX	Q	Chrome	• Quick Pression 1/4 Turn Stem Assembly (G-454-EL, ER)	- - -	$11.90
	1138-LE	Chrome	• Two-Handle Bathroom Faucet • Chain & Stopper • 3-Hole 4" Installation • No-Lift Rod Hole • 1.2 GPM Flow Rate	6	$136.60
	1138-A	Chrome	• Canopy Handles	6	$142.60

BATHROOM

TWO HANDLE BATHROOM FAUCETS

	MODEL#	FINISH	DESCRIPTION	CASE	PRICE
	1133-LE	Chrome	• Two-Handle Bathroom Faucet • 4-3/8" Reach Extended Spout • 3-Hole 4" Installation • With Hole Cover • 1.2 GPM Flow Rate	6	$131.80
	1133-DLE	Chrome	• Brass Pop-Up Drain Assembly	6	$164.20
	1133-A	Chrome	• Canopy Handles	6	$127.10
	1167-AV	Chrome	• Self-Close Two-Handle Bathroom Faucet • Replaceable Seats • 1.2 GPM Flow Rate	6	$263.00
	1177-LE	Chrome	• Two-Handle Shelf-Back Bathroom Faucet • Replaceable Seats • Brass Pop-Up Drain Assembly • 3-Hole 4" to 6" Installation • 1.2 GPM Flow Rate	6	$152.30
	1177-DLE	Chrome		6	$189.60
	1177-A	Chrome	• Canopy Handles	6	$161.00
	1177-DA	Chrome		6	$197.40
	1178-LE	Chrome	• Two-Handle Slant-Back Bathroom Faucet • 45-Degree Slant-Back Spout • 3-Hole 4" to 6" Installation • 1.2 GPM Flow Rate • Brass Pop-Up Drain Assembly	6	$188.40
	1178-DLE	Chrome		6	$222.40
	1178-A	Chrome	• Canopy Handles	6	$227.90
	1178-DA	Chrome		6	$230.20
	3137-AN2	Chrome	• Slow-Close Two-Handle Bathroom Faucet • 3-Hole 4" Installation • 1.2 GPM Flow Rate • Metering Cartridge With 0- to 30-Second Timing Adjustment on Handle • Vandal Resistant 0.5 GPM Flow Rate **Note:** New ADA-Compliant Cartridge and Handle Kit (CS-49016C, H, P) Fit Old/New Slow Close Faucets.	6	$217.50
	3137-AVN2	Chrome		6	$220.70
	3137-DAN2	Chrome	• Slow-Close Two-Handle Bathroom Faucet • 3-Hole 4" Installation • 1.2 GPM Flow Rate • Metering Cartridge With 0- to 30-Second Timing Adjustment on Handle • Vandal Resistant 0.5 GPM Flow Rate **Note:** New ADA-Compliant Cartridge and Handle Kit (CS-49016C, H, P) Fit Old/New Slow Close Faucets.	6	$251.30
	3137-DAVN2	Chrome	• Slow-Close Two-Handle Lavatory Faucet • 3-Hole 4" Installation • Vandal Resistant 0.5 GPM Flow Rate • Metering Cartridge With 0 to 30 Seconds Timing Adjustment On Handle	6	$254.30

BATHROOM

TWO HANDLE BATHROOM FAUCETS

	MODEL#	FINISH	DESCRIPTION	CASE	PRICE
	1125-A	Chrome	• Two-Handle Widespread Bathroom Faucet • 4-1/2" Reach Low-Profile Spout • Quick Pression 1/4 Turn Stems, Replaceable Seats • 3-Hole 6" to 24" Installation • With Hole Cover • 1.2 GPM Flow Rate	6	$177.00
	81125-A	Chrome	• Ceramic Disc Cartridges	6	$182.00
	1125-DA	Chrome	• Two-Handle Widespread Bathroom Faucet • 4-1/2" Reach Low-Profile Spout • Quick Pression 1/4 Turn Stems, Replaceable Seats • 3-Hole 6" to 24" Installation • Brass Pop-Up Drain Assembly • 1.2 GPM Flow Rate	6	$211.60
	81125-DA	Chrome	• Ceramic Disc Cartridges	6	$212.10
	1172-11AELS-Q	Chrome	• Two-Handle Widespread Bathroom Faucet • 4-1/2" Reach Low-Profile Spout • Quick Pression 1/4 Turn Stems, Replaceable Seats • 3-Hole 6" to 24" Installation • 1.2 GPM Flow Rate	6	$215.40
	81172-D12AL1	Chrome	• Two-Handle Widespread Bathroom Faucet • Lever Handles • 5-7/16" Reach C-Style Spout • Flexible Hose Connections • Ceramic Discs • 3-Hole 6" to 24" Installation • Brass Pop-Up Drain Assembly • 1.2 GPM Flow Rate	6	$330.70
	81172-D12AL1-BN	PVD Brushed Nickel		6	$388.70
	3127-AN1	Chrome	• Slow-Close Two-Handle Widespread Bathroom Faucet • 4-1/2" Reach Low-Profile Spout • 3-Hole 6" to 24" Installation • No-Lift Rod Hole • 1.2 GPM Flow Rate • Metering Cartridge With 0- to 30-Second Timing Adjustment on Handle **Note:** New ADA-Complaint Cartridge and Handle Kit (CS-49017C, H, P) Fits Old/New Slow Close Faucets	6	$288.00
	3127-AVN1	Chrome	• 0.5 GPM Flow Rate	6	$288.30

BATHROOM

SINGLE HANDLE BASIC BATHROOM FAUCETS

	MODEL#	FINISH	DESCRIPTION	CASE	PRICE
	0239-P	Chrome	· Single-Handle Basin Faucet · Plain End · Replaceable Seat · 1-Hole Installation	6	$59.40
	0239-AP	Chrome	· 1.2 GPM Flow Rate	6	$65.40
	0255-C	Chrome	· Self-Close Single-Handle Basin Faucet · Plain End · Replaceable Seat · 1-Hole Installation	6	$78.30
	0255-P	Chrome		6	$78.30
	0255-H	Chrome		6	$78.30
	0255-AP	Chrome	· 1.2 GPM Flow Rate	6	$85.90
	0255-AH	Chrome		6	$88.40
	0255-AVC	Chrome	· Vandal-Resistant Cap · 1.2 GPM Flow Rate	6	$89.40
	0255-AC	Chrome	· Self-Close Single-Handle Basin Faucet · With Aerator · Replaceable Seat · 1-Hole Installation · 1.2 GPM Flow Rate	6	$85.90
	0255-AVP	Chrome	· Vandal-Resistant Cap	6	$89.40
	0355-AN2C	Chrome	· Slow-Close Single-Handle Basin Faucet · 1/2-14 NPS Male Inlet x 2-1/4" Long · 1.2 GPM Flow Rate · Metering Cartridge With 0- to 30-Second Timing Adjustment on Handle **Note:** New ADA-Complaint Cartridge and Handle Kit (CS-49016C, H, P) Fits Old/New Slow Close Faucets	6	$122.10
	0355-AN2P	Chrome		6	$122.10
	0355-AN2H	Chrome		6	$122.10
	0355-AVN2C	Chrome	· Vandal Resistant · 0.5 GPM Flow Rate	6	$125.30
	0355-AVN2P	Chrome		6	$125.30
	0356-AN2C	Chrome	· Deluxe Slow-Close Single-Handle Basin Faucet · 1/2-14 NPS Male Inlet x 2-1/4" Long · 1.2 GPM Flow Rate · Metering Cartridge With 0- to 30-Second Timing Adjustment on Handle **Note:** New ADA-Complaint Cartridge and Handle Kit (CS-49016C, H, P) Fits Old/New Slow Close Faucets	6	$145.00
	0356-AN2P	Chrome		6	$145.00
	0356-AVN2P	Chrome	· Vandal Resistant 0.5 GPM Flow Rate	6	$145.00

BATHROOM

ELECTRONIC SENSOR FAUCETS

	MODEL#	FINISH	DESCRIPTION	CASE	PRICE
	0399	Chrome	• Single-Hole Deck-Mount Electronic-Sensor Drinking Faucet • 5-3/16" Reach, 10-1/16" From Deck to Aerator • 1-Hole Installation • Long Battery Life With Low-Battery Indicator • 1/4" Push-to-Connect Fitting for Inlet & Outlet	8	$485.70
	0399-AC	Chrome	• AC/DC Control Module	8	$518.00
	2095	Chrome	• Three-Hole Deck-Mount Electronic-Sensor Faucet • AC/DC Control Module • 4-11/16" Reach, 3" From Deck to Aerator • Temperature Control Mixing Valve • 3-Hole 4" Installation • Long Battery Life With Low-Battery Indicator • 3/8" Compression Stainless-Steel Flex Hoses, Vandal-Resistant 0.5 GPM Flow Aerator	6	$499.00
	2095-LM	Chrome	• Less Mixing Valve	6	$409.00
	2096	Chrome	• Single-Hole Gooseneck Deck-Mount Electronic-Sensor Faucet • AC/DC Control Module • 5-11/16" Reach, 6-3/4" From Deck to Aerator, Rigid Gooseneck Spout • Temperature Control Mixing Valve • Long Battery Life With Low-Battery Indicator • 3/8" Compression Stainless-Steel Flex Hoses, Vandal-Resistant 0.5 GPM Flow Aerator	6	$515.00
	2096-LM	Chrome	• Less Mixing Valve	6	$425.00
	2098	Chrome	• Single-Hole Deck-Mount Electronic-Sensor Faucet • 5-3/16" Reach, 5-5/16" From Deck to Aerator • Long Battery Life With Low-Battery Indicator • 3/8" Compression Stainless-Steel Flex Hoses, Vandal-Resistant 0.5 GPM Flow Aerator • Sensor Range is Adjustable From 3/4" to 6-3/4" • Recommended 4 AA Alkaline Batteries, Run Approximately 300K Cycles Before Needing to be Replaced • No Run-Time Adjustment	6	$432.00
	2098-BN NEW	PVD Brushed Nickel		6	$453.00
	2098-BG NEW	PVD Brushed Gold		6	$477.00
	2098-MB NEW	Matte Black		6	$477.00
	2098-LM	Chrome	• Less Mixing Valve	6	$319.00
	2098-AC	Chrome	• Includes AC Power Adapter	6	$463.00
	2098-AC-LM	Chrome	• Includes AC Power Adapter • 3/8" Compression Stainless-Steel Flex Hoses, Vandal-Resistant 0.5 GPM Flow Aerator • No Run-Time Adjustment • Less Mixing Valve	6	$350.00
	2099 NEW	Chrome	• Single-Hole Deck-Mount Electronic-Sensor Soap Dispenser • 3-3/8" Reach, 2-1/8" From Deck to Nozzle • Long Battery Life With Low-Battery Indicator • Refillable 1000 mL Foam Soap Bottle Included • Adjustable Sensor Range • Soap Dispensing Duration is Adjustable From 0.5s to 2.0s • Modern Style Matches Deck Mount Electronic Sensor Faucet (Model 2098) • Cleaning Mode Available	5	$463.00
	2099-BN NEW	PVD Brushed Nickel		5	$484.00
	2099-BG NEW	PVD Brushed Gold		5	$508.00
	2099-MB NEW	Matte Black		5	$508.00
	2099-AC NEW	Chrome	• AC Power Adapter Included • Refillable 1000 mL Foam Soap Bottle Included	5	$463.00

TUB & SHOWER

TUB & SHOWER TRIM SETS

		MODEL#	FINISH	DESCRIPTION	CASE	PRICE
		80805	Chrome	• Two-Handle Valve Set • Canopy Handles • 1/2" Direct Sweat Inlets • Ceramic Discs • 8" Centers • Built-in Transfer Valve, Brass Plug Included	8	$113.40
		0808-Z	Chrome	• Two-Handle Tub Set • 1/2" Direct Sweat Inlets • 8" Centers • 1/2" IPS & Slip-On Combo Tub Spout • Built-in Transfer Valve, Brass Plug Included	8	$119.10
	CA	0826	Chrome	• Two-Handle Shower Set • Showerhead, Arm & Flange • Replaceable Seats • 8" Centers • Built-in Transfer Valve, Brass Plug Included, 1.5 GPM Flow Rate	8	$135.90
		80826	Chrome	• Canopy Handles	8	$143.90
	CA	0897 (Canopy Option Left)	Chrome	• Two-Handle Tub & Shower Set • Showerhead, Arm & Flange • Replaceable Seats • 8" Centers • 1/2" IPS & Slip-On Combo Diverter Tub Spout • Built-in Transfer Valve, 1.5 GPM Flow Rate	8	$165.40
		80897	Chrome	• Ceramic Discs	8	$168.50
	CA	80897-L3	Chrome	• Lever Handles	8	$243.80
		0850	Chrome	• Three-Handle Valve Set • 1/2" Direct Sweat Inlets • 8" Centers	8	$121.80
		80850	Chrome	• Canopy Handles	8	$134.10

TUB & SHOWER

TUB & SHOWER TRIM SETS

		MODEL#	FINISH	DESCRIPTION	CASE	PRICE
	CA	0868	Chrome	• Three-Handle Tub & Shower Set • Showerhead, Arm & Flange • Replaceable Seats • 8" Centers • 1/2" IPS Brass Tub Spout • 1.5 GPM Flow Rate	8	$215.70
		0868-Z	Chrome	• 1/2" IPS & Slip-On Combo Tub Spout	8	$190.20
		80868	Chrome	• Ceramic Discs	8	$223.30
		80868-Z	Chrome	• 1/2" IPS & Slip-On Combo Tub Spout	8	$205.40
	CA	80868-L3	Chrome	• Lever Handles • Ceramic Discs	8	$334.50
		80868-L3-BN	PVD Brushed Nickel		8	$404.10
		80868-ZL3-BN	PVD Brushed Nickel	• Lever Handles • 1/2" Direct Sweat Inlets • Ceramic Discs • 1/2" IPS & Slip-on Combo Tub Spout	8	$341.38
	CA	80868-C3	Chrome	• Cross Handles	8	$352.10
		0905	Chrome	• Two-Handle Valve Set • 1/2" IP or Copper Sweat Union Inlets • 8" Centers • Built-in Transfer Valve, Brass Plug Included	8	$111.10
		80905	Chrome	• Ceramic Discs	8	$124.20
		0908-Z	Chrome	• Two-Handle Tub Set • 1/2" IP or Copper Sweat Union Inlets • 8" Centers • 1/2" IPS & Slip-On Combo Tub Spout • Built-in Transfer Valve, Brass Plug Included	8	$133.10
		0908	Chrome	• Cast Brass Tub Spout	8	$167.10
	CA	0926	Chrome	• Two-Handle Shower Set • Showerhead, Arm & Flange • Replaceable Seats • 8" Centers • Built-in Transfer Valve, Brass Plug Included, 1.5 GPM Flow Rate	8	$144.30
		80926	Chrome	• Ceramic Disc Cartridges	8	$151.60
	CA	0997	Chrome	• Two-Handle Tub & Shower Set • Showerhead, Arm & Flange • Replaceable Seats • 8" Centers • 1/2" IPS & Slip-On Combo Diverter Tub Spout • Built-in Transfer Valve, 1.5 GPM Flow Rate	8	$176.90
		80997	Chrome	• Ceramic Disc Cartridges	8	$179.30

TUB & SHOWER

TUB & SHOWER TRIM SETS

		MODEL#	FINISH	DESCRIPTION	CASE	PRICE
		0950	Chrome	• Three-Handle Valve Set • 1/2" IP or Copper Sweat Union Inlets • 8" Centers	8	$138.70
		80950	Chrome	• Ceramic Disc Cartridges	8	$148.40
	CA	0968	Chrome	• Three-Handle Tub & Shower Set • Showerhead, Arm & Flange • Replaceable Seats • 8" Centers • 1/2" IPS Brass Tub Spout • 1.5 GPM Flow Rate	8	$230.60
		0968-Z	Chrome	• 1/2" IPS & Slip-On Combo Tub Spout	8	$188.30
		80968	Chrome	• Ceramic Disc Cartridges	8	$233.30
		80968-Z	Chrome	• 1/2" IPS & Slip-On Combo Tub Spout	8	$198.80
		0951	Chrome	• Three-Handle Valve Set • 1/2" IP or Copper Sweat Union Inlets • 11" Centers	8	$160.20
		0961	Chrome	• Three-Handle Tub Set • 1/2" IP or Copper Sweat Union Inlets • 11" Centers • 1/2" IPS Brass Tub Spout	8	$224.60
	CA	0971	Chrome	• Three-Handle Tub & Shower Set • Showerhead, Arm & Flange • Replaceable Seats • 11" Centers • 1/2" IPS Brass Tub Spout • 1.5 GPM Flow Rate	8	$257.80
		0971-Z	Chrome	• Three-Handle Tub & Shower Set • Showerhead, Arm & Flange • Replaceable Seats • 11" Centers • 1/2" IPS & Slip-On Combo Tub Spout • 1.5 GPM Flow Rate	8	$232.70
		80971	Chrome	• Ceramic Disc Cartridges	8	$266.40
		80971-Z	Chrome	• 1/2" IPS & Slip-On Combo Tub Spout	8	$228.80

TUB & SHOWER

TUB & SHOWER TRIM SETS

		MODEL#	FINISH	DESCRIPTION	CASE	PRICE
		6056	Chrome	• Two-Handle Valve Set • 1/2" IP or Copper Sweat Union Inlets • 6" Centers • Built-in Transfer Valve, Brass Plug Included	8	$94.10
		6086-Z	Chrome	• Two-Handle Tub Set • 1/2" IP or Copper Sweat Union Inlets • 6" Centers • 1/2" IPS & Slip-On Combo Tub Spout • Built-in Transfer Valve, Brass Plug Included	8	$118.50
	CA	6266	Chrome	• Two-Handle Shower Set • Showerhead, Arm & Flange • Replaceable Seats • 6" Centers • Built-in Transfer Valve, Brass Plug Included	8	$127.50
		6076	Chrome	• Two-Handle Tub & Shower Set • Showerhead, Arm & Flange • Replaceable Seats • 6" Centers • 1/2" IPS & Slip-On Combo Diverter Tub Spout • Built-in Transfer Valve	8	$157.10

TUB & SHOWER

CANOPY HANDLE

CROSS HANDLE (C3)

LEVER HANDLE (L3)

TUB & SHOWER TRIM SETS

		MODEL#	FINISH	DESCRIPTION	CASE	PRICE
		TC-2 (Canopy Option Left)	Chrome	• Two-Handle Tub & Shower Trim Kit • Canopy Handles & Escutcheons • Showerhead, Arm & Flange • 1/2" IPS & Slip-On Combo Diverter Tub Spout	6	$56.80
		TCR-2	Chrome	• Two-Handle Tub & Shower Replacement Trim Kit	6	$65.90
	♿	**TC-2-L3** (Lever Option Left)	Chrome	• Two-Handle Tub & Shower Trim Kit • Lever Handles & Escutcheons • Dual Function Showerhead, Arm & Flange • Cuttable Two-Corner Stem Assembly With Nipple • 1/2" IPS & Slip-On Combo Diverter Tub Spout	6	$211.50
		TC-2-C3	Chrome	• Cross Handles & Escutcheons	6	$214.80
		TC-2-C3-BN	PVD Brushed Nickel		6	$222.60
		TC-3 (Canopy Option Left)	Chrome	• Three-Handle Tub & Shower Trim Kit • Canopy Handles & Escutcheons • Showerhead, Arm & Flange • 1/2" IPS & Slip-On Combo Tub Spout	6	$75.50
		TCR-3	Chrome	• Three-Handle Tub & Shower Replacement Trim Kit	6	$85.60

TUB & SHOWER

TUB & SHOWER TRIM SETS

		MODEL#	FINISH	DESCRIPTION	CASE	PRICE
		TC-3-C3	Chrome	• Three-Handle Tub & Shower Trim Kit • Cross Handles & Escutcheons • Dual Function Showerhead, Arm & Flange • Cuttable Two-Corner/One-Diverter Stem Assembly With Nipple • 1/2" IPS & Slip-On Combo Tub Spout	6	$272.10
		TC-3-C3-BN	PVD Brushed Nickel		6	$284.20
	♿	TC-3-L3	Chrome	• Three-Handle Tub & Shower Trim Kit • Lever Handles & Escutcheons • Dual Function Showerhead, Arm & Flange • Cuttable Two-Corner/One-Diverter Stem Assembly With Nipple • 1/2" IPS & Slip-On Combo Tub Spout	6	$259.80
		TC-3-L3-BN	PVD Brushed Nickel		6	$272.40

TUB & SHOWER

TUB & SHOWER SPECIALTY PRODUCTS

	MODEL#	FINISH	DESCRIPTION	CASE	PRICE
	1379	Chrome	• Two-Handle Exposed Shower Set • 22-1/2" High Brass Riser • Quick Pression 1/4 Turn Stems, Replaceable Seats • 6" Centers • Showerhead	6	$258.80
	1379-L	Chrome	• Two-Handle Exposed Valve Set • 1/2" IP or Copper Sweat Union Inlets • 6" Centers	6	$171.90
	1380	Chrome	• Two-Handle Exposed Shower Set • 22-1/2" High Brass Riser • Quick Pression 1/4 Turn Stems, Replaceable Seats • 8" Centers • Showerhead	6	$273.20
	1380-L	Chrome	• Two-Handle Exposed Valve Set • 1/2" IP or Copper Sweat Union Inlets • 8" Centers	6	$191.00

TUB & SHOWER

TUB & SHOWER SPECIALTY PRODUCTS

	MODEL#	FINISH	DESCRIPTION	CASE	PRICE
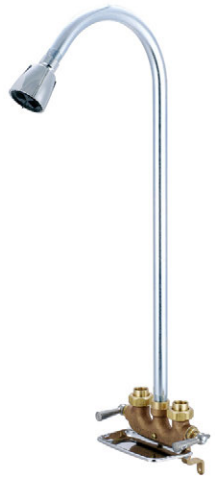	0477	Rough Brass	• Two-Handle Utility Shower • 22-1/2" High Galvanized Riser • Quick Pression 1/4 Turn Stems • 3-1/2" Centers • Showerhead and Soap Dish • 1.5 GPM Flow Rate	4	$124.70
	0477-RC	Rough Chrome		4	$127.70
	0206	Chrome	• Two-Handle Leg-Tub Faucet • 3/4-14 NPS Male Inlets • 2-Hole 3-3/8" Installation	6	$67.50
	0208	Chrome	• Two-Handle Leg-Tub Faucet • 7-3/8" High, 4-1/16" Reach Gooseneck Spout • Quick Pression 1/4 Turn Stems, Replaceable Seats • 2-Hole 3-3/8" Installation	6	$79.50
	0209	Chrome	• Two-Handle Leg-Tub Faucet • 9-7/16" High, 4-1/4" Reach Gooseneck Spout • Quick Pression 1/4 Turn Stems, Replaceable Seats • 2-Hole 3-3/8" Installation	6	$92.00

TUB & SHOWER

TUB & SHOWER SPECIALTY PRODUCTS

	MODEL#	FINISH	DESCRIPTION	CASE	PRICE
	0210	Chrome	• Two-Handle Leg-Tub Faucet • 3/4-14 NPS Male Inlets • 2-Hole 3-3/8" Installation • Adjustable Flanges	6	$81.80
	0210-Q	Chrome	• Two-Handle Leg-Tub Faucet • 3/4-14 NPS Male Inlets • 2-Hole 3-3/8" Installation • Adjustable Flanges	6	$83.60
	0211	Chrome	• Two-Handle Leg-Tub Faucet • 3/4-14 NPS Male Inlets • 2-Hole 2-1/2" to 8-1/2" Installation	6	$155.30
	0211-Q	Chrome	• Two-Handle Leg-Tub Faucet • 3/4-14 NPS Male Inlets • 2-Hole 2-1/2" to 8-1/2" Installation	6	$151.30
	1240	Chrome	• Cast Brass Shower Valve • Single By-Pass • Replaceable Seats • Threaded Escutcheon	6	$108.20

TUB & SHOWER

TUB & SHOWER SPECIALTY PRODUCTS

	MODEL#	FINISH	DESCRIPTION	CASE	PRICE
	1246	Chrome	• Cast Brass Shower Corner Valve • 1/2" IP or Copper Sweat Union Inlets	6	$102.80
	0334-1/2	Chrome	• Self-Close Shower Straight Stop • 1/2-14 NPT Female Thread	6	$77.00
	0335-1/2	Chrome	• Self-Close Shower Straight Stop • 1/2-14 NPT Female Thread	6	$84.40
SUFFIX	V		Vandal-Resistant Cap	- - -	$3.30

TUB & SHOWER

TUB & SHOWER BATH DRAINS

	MODEL#	FINISH	DESCRIPTION	CASE	PRICE
	1645	Chrome	• Multi-Tub Centralift Lift & Turn Drain • 20 Gauge 1-1/2" Drain Tubes • Fits Most Tubs 14" to 16" High	6	$108.30
	1645-17	Chrome	• Multi-Tub Centralift Lift & Turn Drain • 17 Gauge 1-1/2" Drain Tubes • Fits Most Tubs 14" to 16" High	6	$119.90
	1645-CO	Chrome	• Multi-Tub Centralift Lift & Turn Drain • Cleanout Rink • Fits Most Tubs 14" to 16" High	6	$118.70
	1645-PR	Chrome	• Multi-Tub Centralift Lift & Turn Drain • One Additional Slip Nut (3008-BP) & Slip Washer (149-RP) • Less Tailpiece for Philadelphia Regulation	6	$116.30
	1645-S	Chrome	• Multi-Tub Centralift Lift & Turn Drain • Fits Most Tubs 14" to 16" High	6	$146.50
	1675	Chrome	• Multi-Tub Pop-Up Bath Drain	6	$136.30
	1675-S	Chrome	• Multi-Tub Pop-Up Bath Drain • Fits Most Tubs 14" to 16" High	6	$162.80

TUB & SHOWER

TUB & SHOWER BATH DRAINS

	MODEL#	FINISH	DESCRIPTION	CASE	PRICE
	1555	Chrome	• Multi-Tub Trip-Lever Bath Drain • 20-Gauge 1-1/2" Drain Tubes	6	$111.90
	1655	Chrome	• Multi-Tub Trip-Lever Bath Drain • Fits Most Tubs 14" to 16" High	6	$114.00
	1655-P	Chrome	• Multi-Tub Trip-Lever Bath Drain • One Additional Slip Nut (3008-BP) & Slip Washer (149-RP) • Less Tailpiece for Philadelphia Regulation	6	$115.10
	1655-X	Chrome	• Multi-Tub Trip-Lever Bath Drain • Cast Brass Nuts (3008-X)	6	$114.00
	1655-X1817	Chrome	• Multi-Tub Trip-Lever Bath Drain • 18" Overflow Tube & 9-9/16" Shoe Tube • Fits Most Tubs Up to 24" High • Fits Many 17-Gauge Whirlpool Tubs	6	$145.40
	1665-WX	Chrome	• Multi-Tub Trip-Lever Bath Drain • Plug Body With Brass Nuts • Fits Most Tubs 14" to 16" High	6	$129.90
	1665-XP17	Chrome	• Multi-Tub Trip-Lever Bath Drain • 17-Gauge 1-1/2" Drain Tubes • Fits Most Tubs 14" to 16" High • Less Tailpiece for Philadelphia Regulation	6	$137.40

TUB & SHOWER

TUB & SHOWER BATH DRAIN TRIM KITS

	MODEL#	FINISH	DESCRIPTION	CASE	PRICE
	CS-66001	Chrome	• Trim Kit for 1645 Bath Drain Series	30	$39.00
	CS-66001-BN	PVD Brushed Nickel		30	$42.70
	CS-66002	Chrome	• Trim Kit for 1675 Bath Drain Series	30	$41.10
	CS-66002-BN	PVD Brushed Nickel		30	$46.50
	CS-66003	Chrome	• Trim Kit for 1555/1655 Bath Drain Series	30	$35.30
	CS-66003-BN	PVD Brushed Nickel		30	$36.90
	CS-66004	Chrome	• Trim Kit for 1665 Bath Drain Series	30	$37.30
	CS-66004-BN	PVD Brushed Nickel		30	$38.50

DRINKING FAUCETS

DRINKING FAUCETS / BUBBLER HEADS

		MODEL#	FINISH	DESCRIPTION	CASE	PRICE
	✓	0364-L	Chrome	• Drinking Faucet • 1/2-14 NPS Male Thread	6	$194.00
	✓	0365-L	Chrome	• Drinking Faucet • 3/8-18 NPT Female Thread	6	$172.30
	✓	0366-L	Chrome	• Drinking Faucet – Wall Mount • 3/8-18 NPT Female Thread	6	$171.20
	✓	0364-N2	Chrome	• Drinking Faucet • 1/2-14 NPS Male Thread	6	$169.60
SUFFIX #		V	Chrome	Vandal-Resistant Cap (Available on 0364-L, 0365-L and 0366-L)	- - -	$3.30

DRINKING FAUCETS

DRINKING FAUCETS / BUBBLER HEADS

		MODEL#	FINISH	DESCRIPTION	CASE	PRICE
	✓	0360	Chrome	• Drinking Faucet • 1/2-14 NPS Male Thread • Flange	6	$103.20
	✓	0361	Chrome	• Drinking Faucet • 3/8-18 NPS Female Thread • Flange	36	$89.00
	✓	0362	Chrome	• Drinking Faucet • 3/8-18 NPS Female Thread	36	$83.90

DRINKING FAUCETS

DRINKING FAUCETS / BUBBLER HEADS

		MODEL#	FINISH	DESCRIPTION	CASE	PRICE
	✓	0366-HX8VWB	Chrome	• Drinking Fountain – Wall Mount • Brass Round Bowl, Brushed Finish • Replaceable Seat • Drain Adapter, 3/8" to 1-1/4" • Vandal-Resistant Cap	6	$339.50
		0366-HX8WBD	Chrome	• Drain Adapter, 3/8" to 1-1/4"	6	$336.90
	✓	0366-HX8	Chrome	• Drinking Fountain – Wall Mount • Brass Round Bowl, Brushed Finish • Replaceable Seat • Drain Adapter, 3/8" to 1-1/4"	6	$284.00
	✓	0366-N2	Chrome	• Drinking Faucet – Wall Mount • 3/8-18 NPT Female Thread	6	$162.10
	✓	0366-N2HX8WB	Chrome	• Drinking Fountain – Wall Mount • Brass Round Bowl, Brushed Finish • Drain Adapter, 3/8" to 1-1/4" • Metering Cartridge With 0- to 30-Second Timing Adjustment on Handle	6	$316.60
SUFFIX #		V	Chrome	• Vandal-Resistant Cap	- - -	$3.30

DRINKING FAUCETS

DRINKING FAUCETS / BUBBLER HEADS

		MODEL#	FINISH	DESCRIPTION	CASE	PRICE
	✓	0376	Chrome	• Drinking Faucet – Head • Less Stream Control	12	$39.50
	✓	0377	Chrome	• Drinking Faucet – Head • With Stream Control	12	$65.90
	✓	0425	Chrome	• Gravity Faucet • 3/8-18 NPS Male Thread	40	$31.20
	✓	0426	Chrome	• Gravity Faucet • 3/8-18 NPS Female Thread	40	$23.90

WALL MOUNTS

SELF-CLOSING WALL MOUNTS & STOPS

		MODEL#	FINISH	DESCRIPTION	CASE	PRICE
		0031-H1/2C	Rough Chrome	• Self-Close Wall Mount Faucet • 4-Arm Handle • Hose Thread • 1/2-14 NPT Male Thread • Replaceable Seat • 1-Hole Wall-Mount Installation	6	$88.20
		0031-H1/2P	Rough Chrome		6	$88.20
		0031-H1/2H	Rough Chrome		6	$88.20
	✓	0033-1/2CV-02	Chrome	• Self-Close Wall Mount Faucet • 4-Arm Vandal-Proof Handle • Plain End • 1/2-14 NPT Female Thread • Replaceable Seat • 1-Hole Wall-Mount Installation • Solid Flange	6	$127.00
		0033-1/2PV-02	Chrome		6	$127.00
		0033-1/2HV-02	Chrome		6	$127.00

WALL MOUNT SINGLE HANDLE FAUCETS

		MODEL#	FINISH	DESCRIPTION	CASE	PRICE
		0005-H1/2P	Chrome	• Single-Handle Wall Mount Faucet • 4-Arm Handle With Optional Red/Blue Indexes • Hose Thread • 1/2-14 NPT Female Thread • Replaceable Seat • 1-Hole Wall-Mount Installation • Adjustable Flange	6	$66.60
		0006-H1/2C	Rough Chrome	• Single-Handle Wall Mount Faucet • Lever Handle • Hose Thread • 1/2-14 NPT Male Thread • Replaceable Seat • 1-Hole Wall-Mount Installation • Adjustable Flange	6	$48.50
		0006-H1/2H	Rough Chrome		6	$48.90
	✓	0007-1/2	Chrome	• Single-Handle Wall Mount Faucet • 4-Arm Handle • Plain End • 1/2-14 NPT Female Thread • Replaceable Seat • 1-Hole Wall-Mount Installation • Solid Flange	6	$60.00
		0007-H1/2	Chrome	• Single-Handle Wall Mount Faucet • 4-Arm Handle • Hose Thread • 1/2-14 NPT Female Thread • Replaceable Seat • 1-Hole Wall-Mount Installation • Solid Flange	6	$63.70

SPECIALTY

SELF-CLOSING STOPS

		MODEL#	FINISH	DESCRIPTION	CASE	PRICE
		0331-3/8	Chrome	• Self-Close Straight Stop • 3/8-18 NPT Female Thread	6	$76.90
		0331-1/2	Chrome	• Self-Close Straight Stop • 1/2-14 NPT Female Thread	6	$82.50
	✓	0331-L3/8	Chrome	• Self-Close Straight Stop • 3/8-18 NPT Female Thread	6	$81.60
		0331-L1/2	Chrome	• Self-Close Straight Stop • 1/2-14 NPT Female Thread	6	$82.80
		0333-3/8	Chrome	• Self-Close Angle Stop • 3/8-18 NPT Female Thread	6	$78.00
		0333-1/2	Chrome	• Self-Close Angle Stop • 1/2-14 NPT Female Thread	6	$83.00
	✓	0333-L3/8	Chrome	• Self-Close Angle Stop • 3/8-18 NPT Female Thread	6	$80.10
		0333-L1/2	Chrome	• Self-Close Angle Stop • 1/2-14 NPT Female Thread	6	$83.20
SUFFIX #		V	Chrome	• Vandal-Resistant Cap	- - -	$3.30
		0336-N2-3/8	Chrome	• Slow-Close Straight Stop • 3/8-18 NPT Female Thread	6	$83.50
		0336-N2-1/2	Chrome	• Slow-Close Straight Stop • 1/2-14 NPT Female Thread	6	$85.60

SPECIALTY

SPECIALTY VALVES

	MODEL#	FINISH	DESCRIPTION	CASE	PRICE
	0555	Rough Brass	• Alliance Anti-Sweat Temperator Valve for Water Closet Tanks • 3/8-18 NPT Male Taper Thread	36	$48.00
	0555-D	Rough Brass	• Alliance Anti-Sweat Temperator Valve for Water Closet Tanks • 3/8-18 NPT Male Taper Thread • With Drains	36	$50.20
	0607-C1/2	Chrome	• Tile Stop Valve • 1/2" Direct Sweat Inlet & Outlet	6	$47.70
	0607-C3/4	Chrome	• Tile Stop Valve • 3/4" Direct Sweat Inlet & Outlet	6	$47.60

SPECIALTY LAWN FAUCETS

	MODEL#	FINISH	DESCRIPTION	CASE	PRICE
	0575-1/2	Rough Brass	• Lawn Faucet • Cast Brass Body, Hose Thread • Flange	6	$41.50
	0575-1/2CP	Chrome		6	$69.00
	0576-1/2	Rough Brass	• Lawn Faucet • Cast Brass Body, Hose Thread • Lockshield Type • Flange	6	$43.80
	0576-1/2CP	Chrome		6	$69.00
	0576-3/4	Rough Brass	• Lawn Faucet • Cast Brass Body, Hose Thread • Lockshield Type • Flange	6	$41.50

SPECIALTY

SPECIALTY SHAMPOO FAUCETS

	MODEL#	FINISH	DESCRIPTION	CASE	PRICE
	1130	Chrome	• Single-Handle Shampoo Faucet • Ceramic Disc With Temperature Limit Stop • 2-Hole 4” to 6” Installation • Pull-out Dual Pattern Sprayhead With 60” Heavy Duty Rubber Hose • 2.0 GPM Flow Rate	6	$128.40
	1131-B	Chrome	• Two-Handle Shampoo Faucet • 35-Degree Bottom Outlet Supply Tube • Quick Pression 1/4 Turn Stems, Replaceable Seats • 3-Hole 4” Installation	6	$86.20
	1132-B	Chrome	• 3-Hole 3-3/8” Installation	6	$97.30
	CS-45002	Chrome	• Pull-Out Spray Head and 60” Heavy-Duty Rubber Hose Kit for 1130	- - -	$43.70
	CS-45003	Chrome	• Hose Guide and Mounting Kit for 1130	- - -	$17.10

ACCESSORIES

ACCESSORIES

	MODEL#	FINISH	DESCRIPTION	CASE	PRICE
	0342-3/8	Chrome	• Standpipe • Nut & Flange	24	$20.80
	0342-1/2	Chrome	• Standpipe • Nut & Flange	24	$21.60
	0342-1/2VB	Chrome	• Standpipe • Nut & Flange	12	$70.70
	1109	Chrome	• Brass Pop-Up Drain Assembly With Guide • Upper & Lower Pull Rods	12	$43.60
	1109-LG	Chrome	• Brass Pop-Up Drain Assembly Less Guide • Upper & Lower Pull Rods	12	$42.10
	1109-BP	Chrome	• Brass Pop-Up Drain Assembly With Guide • Upper & Lower Pull Rods	12	$58.20
	1109-BPLG	Chrome	• Brass Pop-Up Drain Assembly Less Guide • Upper & Lower Pull Rods	12	$53.60
	3105	Chrome	• Vandal-Resistant Grid Drain • 17-Gauge Tailpiece	12	$24.30
	3105-BP	Chrome	• Vandal-Resistant Grid Drain • 17-Gauge Tailpiece	12	$26.40
	3106	Chrome	• Vandal-Resistant Grid Drain • 17-Gauge Tailpiece	12	$47.50

ACCESSORIES

ACCESSORIES

	MODEL#	FINISH	DESCRIPTION	CASE	PRICE
	G-1748-88W	Chrome	• Swivel-Spout Adapter • Allows for Top Mount Faucets to be Mounted on Splash Back	- - -	$16.30
	SU-2775-R-02	Chrome	• Double-Joint Swing Spout Extension • 7" C to C • Heavy Cast Brass Construction • Ideal for Three-Compartment Sinks	- - -	$46.60
	0112-AL	Chrome	• 1-11 1/2 NPS Shank x 1-7/8" Long	60	$20.80

CHARTS

KITCHEN / BATHROOM HANDLE CONFIGURATION OPTIONS

SU-363-RA
8” Swivel Tube Spout With Aerator

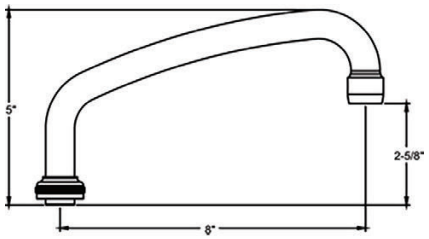

SU-363-JA
10” Swivel Tube Spout With Aerator

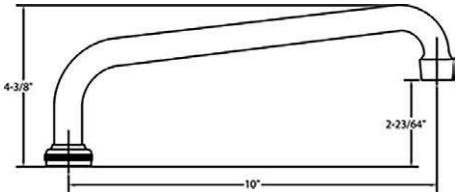

SU-363-LA
12” Swivel Tube Spout With Aerator

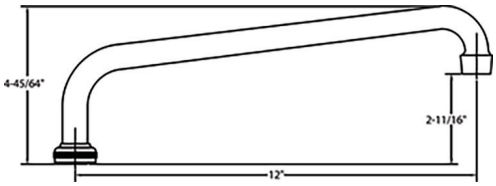

SU-363-MA
14” Swivel Tube Spout With Aerator

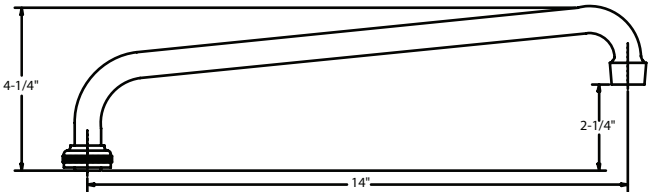

CS-22004
16” Swivel Tube Spout With Aerator

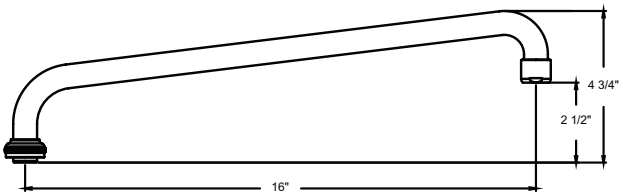

CS-22005
18” Swivel Tube Spout With Aerator

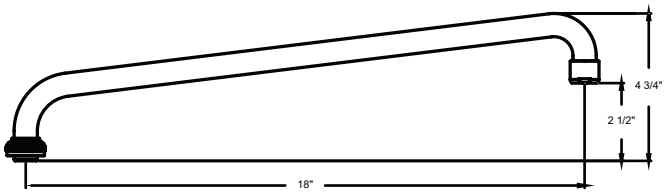

SU-2929-01
6” Hose End Cast Swivel Spout

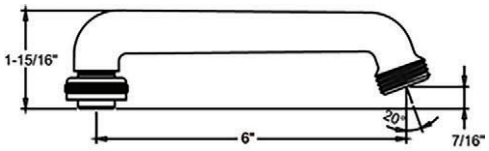

SU-365-CA
8” Brass Swivel “D” Spout With Aerator

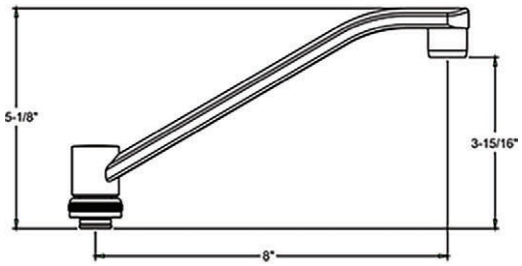

CHARTS

KITCHEN / BATHROOM HANDLE CONFIGURATION OPTIONS

SU-2923-A
5” Cast Brass Swivel Spout With Aerator

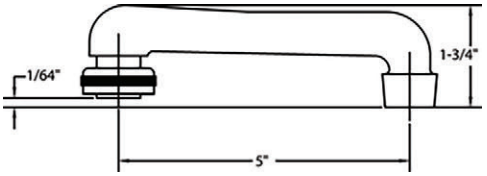

SU – 2775-R-02
7” Cast Brass Spout Extension Polished Chrome

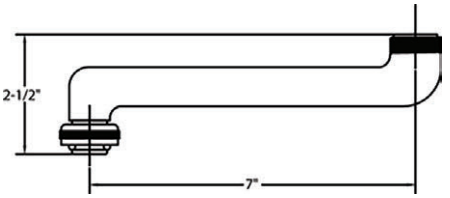

SU-2924-A
6” Tube Spout With Aerator

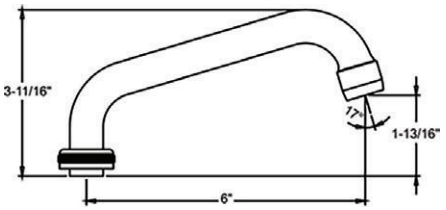

SU-157-GRA
4-3/32” Rigid Gooseneck Spout With Aerator

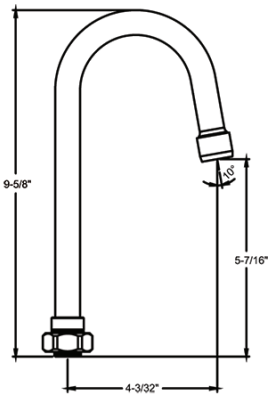

SU-157-GSA
4-3/32” Swivel Gooseneck Spout With Aerator

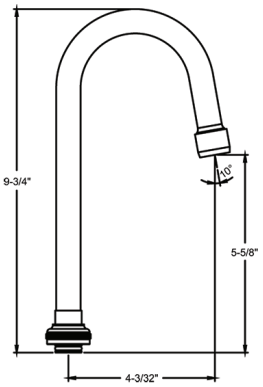

CS-25001 (GSA1)
4-3/32” Swivel Gooseneck Spout With Aerator

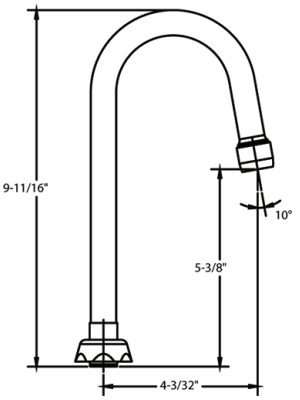

CHARTS

KITCHEN / BATHROOM HANDLE CONFIGURATION OPTIONS

CS-22002
4-3/32” Combo Rigid/Swivel Gooseneck Spout With Aerator

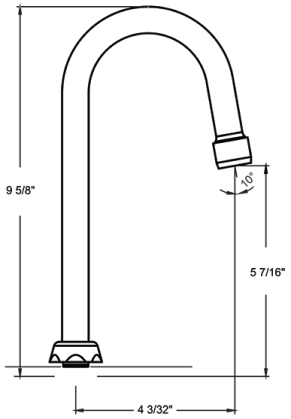

CS-22003
5-1/2” Combo Rigid/Swivel Gooseneck Spout With Aerator

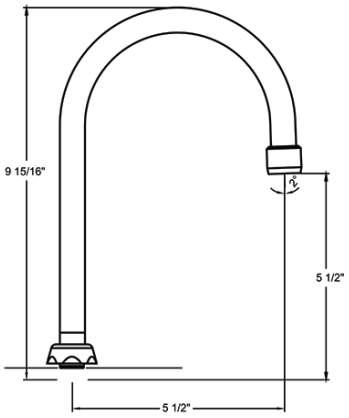

SU-157-KRA
5-1/2” Rigid Gooseneck Spout With Aerator

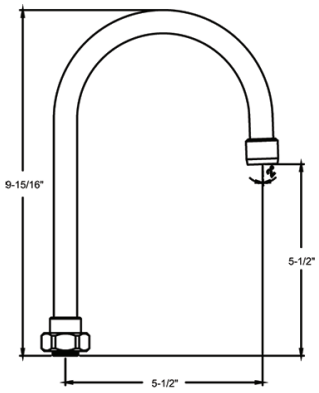

SU-157-KSA
5-1/2” Swivel Gooseneck Spout With Aerator

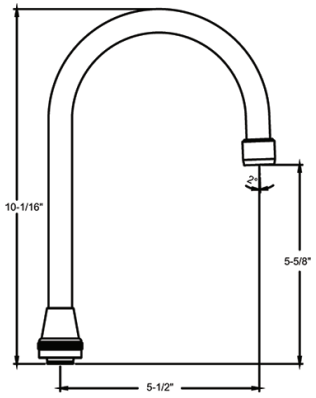

SU-257-TSA
6-3/8” Swivel Tri-Arc Gooseneck Spout With Aerator

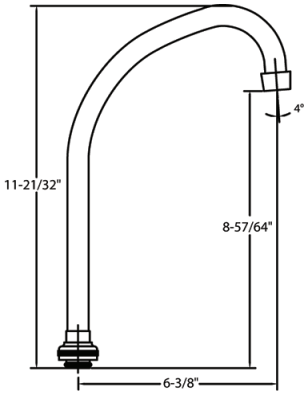

CS-22001 (TSA1)
6-3/8” Swivel Tri-Arc Gooseneck Spout With Aerator

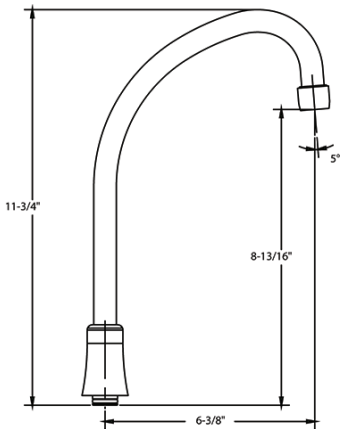

CHARTS

KITCHEN / BATHROOM HANDLE CONFIGURATION OPTIONS

CS-22008
5-1/2" Rigid/Swivel Spout With Vacuum Breaker and Serrated Tip

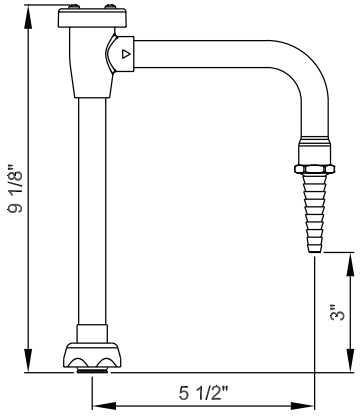

SU-357-HSA
7-1/4" Swivel High Rise Spout With Aerator

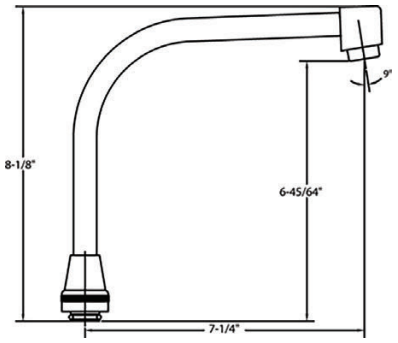

SU-357-WSA
8-3/4" Swivel Gooseneck Spout With Aerator

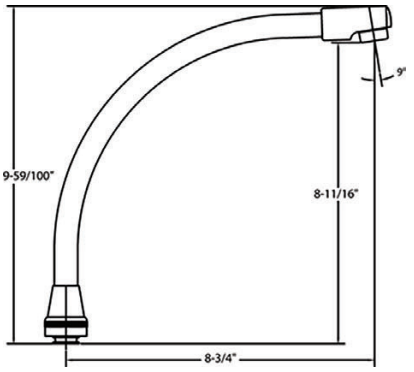

CHARTS

KITCHEN / BATHROOM HANDLE CONFIGURATION OPTIONS

K-512-02 K-512-15	G-518-C G-518-H	G-523-C G-523-H	G-4147-C G-4147-H

G-4149-C G-4149-H	G-398-C G-398-H	CS-19003C CS-19003H	CS-19004C CS-19004H

CS-19001C CS-19001H	CS-19002C CS-19002H	CS-19007C CS-19007H

SELF-CLOSE / METERING HANDLE CONFIGURATION OPTIONS

G-7116-V*	PF-7114-P*	G-6928-V*	PF-7114-PS*

*Cap Sold Separately

CHARTS

SINGLE BASIN HANDLE CONFIGURATION OPTIONS

G-520-W	G-1043	CS-13001C CS-13001P CS-13001H

TUB & SHOWER HANDLE CONFIGURATION OPTIONS

G-521-BWC* G-521-BWD* G-521-BWH*	CS-14002C CS-14002P CS-14002H	CS-14001C CS-14001P CS-14001H	G-508-C* G-508-H* G-508-D*

*Escutcheons Sold Separately

PARTS

	PART #	DESCRIPTION	PCS/ CS	LIST PRICE
Replacements for Compression Units Only				
	K-454-C	Quick Pression 1/4 Turn Stem Assembly With Replaceable Seat – Cold	1	$13.80
	K-454-H	Hot		
	G-454-EL	Quick Pression 1/4 Turn Stem Assembly – Left	1	$11.90
	G-454-ER	Right		
	G-458-KL	Stem Assembly – Left	1	$19.20
	G-458-KR	Right		
	K-2-CT	Stem Assembly With Replaceable Seat – Old Style	1	$36.80
	K-2-DT	Diverter Stem Assembly With Replaceable Seat – Old Style	1	$65.30
	K-3-CT	Stem Assembly With Replaceable Seat	1	$24.50
	K-3-DT	Diverter Stem Assembly With Replaceable Seat	1	$25.30
Replacements for Ceramic Units Only				
	K-352-C	Ceramic Stem Assembly – Cold	1	$35.40
	K-352-H	Hot		
	K-351-C	Ceramic Stem Assembly – Cold	1	$45.20
	K-351-H	Hot		
	CS-34001C	Ceramic Stem Assembly – Cold	- - -	$32.70
	CS-34001H	Hot		
	CS-34001V	Diverter Stem Assembly	- - -	$26.20

	PART #	DESCRIPTION	PCS/ CS	LIST PRICE
Replacements for Metering (Slow-Close) Units Only				
	CS-49016C	Repair Kit for New/Old Slow-Close – Cold	1	$39.10
	CS-49016H	Hot		
	CS-49016P	Repair Kit for New/Old Slow-Close – Plain	1	$39.10
	CS-49017C	Repair Kit for New/Old Slow-Close Widespread Bathroom – Cold	1	$41.70
	CS-49017H	Hot		
Replacement for Self-Close Units Only				
	CS-39002	Self-Closing Stem Assembly With Centerpiece	- - -	$53.40
	CS-39003	Self-Closing Stem Assembly With Centerpiece	- - -	$26.20
Replacement for Handles				
	G-4147-C	Wrist Handle (4") With Blue Index Ring & Screw – Cold	1	$35.00
	G-4147-H	Wrist Handle (4") With Red Index Ring & Screw – Hot		
	G-508-C	Large Canopy Handle With Screw – Cold	1	$13.10
	G-508-D	Large Canopy Handle With Screw – Diverter	1	
	G-508-H	Large Canopy Handle With Screw – Hot	1	
	G-523-C	Canopy Handle With Screw – Cold	1	$7.10
	G-523-H	Canopy Handle With Screw – Hot		

PARTS

	PART #	DESCRIPTION	PCS/ CS	LIST PRICE
Miscellaneous				
	521-B	Escutcheon	1	$9.90
	G-1043-C	Cylinder Sub-Unit With Gasket	1	$28.70
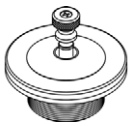	**G-3036-A**	Centralift Strainer Group	1	$66.10
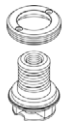	**K-361**	Stem Assembly for Drinking Faucets (0360/0361/0362)	1	$44.20
	PF-161-D	Flange for Bubbler Head	1	$9.70

PART #	DESCRIPTION	PCS/ CS	LIST PRICE
1008-B	Stainless-Steel Spring	1	$3.00
1011-N	Escutcheon – Corner	1	$9.00
1012-N	Escutcheon – Spout	1	$9.80
157-I	Riser – Galvanized Gooseneck	1	$33.30
2056-SPT1109	Top Flange for 1109 Pop-Up	1	$5.50
2126-A	Rocker Arm for 1177	1	$7.20
268-TVR	Set-Diverter Piston	1	$3.70
2985-J	Cast Brass Centerpiece	1	$35.00
3034-1/2-02	2.5 GPM Flow Rate	1	$19.50
3042-A	Plunger for 1655	1	$29.10
3042-P	Plunger for 1555	1	$9.40
3061-AZ1/2	1/2” IPS & Slip-On Combo Diverter Tub Spout	1	$27.80
312-10N	10” Hose Connector	1	$17.10
3145-D	Brass Overim Tub Spout, 1/2” IPS	1	$66.00
3154-Z	Zamak Overim Tub Spout, 1/2” IPS	1	$16.40
3362	Strainer-Plug Body	1	$32.70
390	Flange	1	$7.80
510	Escutcheon for 1177	1	$7.90
521-B	Escutcheon	1	$9.90
524-B	Escutcheon for Ledge Fittings	1	$7.10
530	Escutcheon for Slow-Close Widespread Bathroom Use	1	$6.20
61-LC	Linkage (5-3/8”)	1	$3.90
61-LU	Clevis	1	$2.80
7074-L	Drain Plate – Chrome Plated	1	$21.20
714-WT-02	Shower Arm 6”	1	$11.20
7255-M	Loose Key	1	$3.50
731-K	Tailpiece Bent 90 Degrees for 1645-S/1675-S	1	$26.90
781-A	Shank	1	$16.70
85-FW	Steel Wrench	1	$1.30
990-L	Sponge Washer	1	$6.30
CS-13001C	Cross Handle – Cold	1	$22.80
CS-13001H	Cross Handle – Hot	1	$22.80
CS-13001P	Cross Handle – Plain	1	$23.90
CS-13002C	Push Handle for 3127 – Cold	1	$15.70
CS-13002H	Push Handle for 3127 – Hot	1	$15.70
CS-13003P	Push Handle for 0355/0356/0336/ 3137 – Plain	1	$6.10
CS-13004C	Stem Assembly With Centerpiece & Lever Vandal-Proof Handle for 1167 – Cold	- - -	$122.00
CS-13004H	Stem Assembly With Centerpiece & Lever Vandal-Proof Handle for 1167 – Hot	- - -	$124.50
CS-14001C	Lever Handle – Cold	1	$51.30
CS-14001H	Lever Handle – Hot	1	$49.90

Note: Order by number of packs required. Not by individual pieces.

PARTS

PART #	DESCRIPTION	PCS/ CS	LIST PRICE
CS-14001P	Lever Handle – Plain	1	$52.80
CS-14002C	Cross Handle – Cold	1	$55.50
CS-14002H	Cross Handle – Hot	1	$54.90
CS-14002P	Cross Handle – Plain	1	$56.00
CS-15001	Lever Handle	1	$17.70
CS-19001C	Lever Handle – Cold	1	$35.40
CS-19001H	Lever Handle – Hot	1	$35.40
CS-19002C	Lever Handle – Cold	1	$33.10
CS-19002H	Lever Handle – Hot	1	$33.10
CS-19003C	Cross Handle – Cold	1	$43.60
CS-19003H	Cross Handle – Hot	1	$43.60
CS-19004C	Cross Handle – Cold	1	$36.50
CS-19004H	Cross Handle – Hot	1	$36.50
CS-19005	Stem Assembly With Centerpiece & Lever Handle With Cap – Plain	- - -	$57.60
CS-19006	Stem Assembly With Centerpiece & 4-Arm Handle With Cap – Plain	- - -	$57.60
CS-22001	6-3/8" Swivel Tri-Arc Gooseneck Spout With Aerator	1	$73.20
CS-22002	4-3/32" Combo Rigid/Swivel Gooseneck Spout With Aerator	- - -	$41.10
CS-22003	5-1/2" Combo Rigid/Swivel Gooseneck Spout With Aerator	- - -	$45.00
CS-22004	16" Swivel Tube Spout With Aerator	- - -	$45.00
CS-22005	18" Swivel Tube Spout With Aerator	- - -	$47.90
CS-23002	5-7/16" C-Style Spout With Aerator With Pop-Up Hole	- - -	$98.50
CS-25001	4-3/32" Swivel Gooseneck Spout With Aerator	1	$36.40
CS-34001C	Ceramic Stem Assembly	- - -	$32.70
CS-34001H	Ceramic Stem Assembly	- - -	$31.40
CS-34001V	Diverter Stem Assembly	- - -	$26.20
CS-39001	Ceramic Disc	1	$11.10
CS-39002	Self-Closing Stem Assembly With Centerpiece	- - -	$53.40
CS-39003	Self-Closing Stem Assembly With Centerpiece	- - -	$26.20
CS-39004	Metering (Slow-Close) Cartridge	1	$38.10
CS-39005C	Quick Pression 1/4 Turn Stem Assembly With Check Valve – Cold	1	$13.10
CS-39005H	Quick Pression 1/4 Turn Stem Assembly With Check Valve – Hot	1	$13.10
CS-42001	Spout Escutcheon	- - -	$36.90
CS-42011	Drain Adapter, 2" Female to 1-1/2" Male	- - -	$23.10
CS-42012	Drain Adapter, 1-1/2" Male to 1-1/2" Male	- - -	$13.70
CS-42015	Hose Adapter With Check Valve	- - -	$10.20
CS-42016	Spring Body	- - -	$30.00

PART #	DESCRIPTION	PCS/ CS	LIST PRICE
CS-42020	Body Adapter	- - -	$14.00
CS-42026	1/4" Allen Wrench	- - -	$1.20
CS-42027	26" Flexible Stainless-Steel Hose	- - -	$75.00
CS-42028	Adapter Package	- - -	$21.90
CS-42032	Escutcheon	- - -	$11.50
CS-42033	Shank and Flange Assembly	- - -	$26.70
CS-43001	Mechanical Mixing Valve	1	$70.00
CS-43005	18" Long 1/4" x 1/2" Flex-Hose Connector	- - -	$10.70
CS-43006	30" Long 3/8" x 1/2" Flex Hose Connector	- - -	$10.70
CS-43007	Control Module Filter	- - -	$3.40
CS-43008	Ball-Lever Rod Group for 1177/1178	- - -	$5.70
CS-43009	8" Center Tee With Rocker Arm for Shelf-Back/Slant-Back Bathroom Faucet	1	$63.20
CS-43013	6" Deck Plate	- - -	$15.80
CS-44001	Valve Escutcheon	- - -	$22.50
CS-44002	2-9/16" Cuttable Brass Nipple	1	$4.50
CS-46001	Strain Plate With Weep Holes	- - -	$2.80
CS-47001	10 mm Check Valve	- - -	$6.20
CS-48001	Drain Adapter, 3/8" to 1-1/4"	- - -	$22.10
CS-49003	Vandal-Resistant 13/16"-27 Male Thread 0.5 GPM Spray Pattern Aerator	- - -	$16.20
CS-49004	Vandal-Resistant 55/64"-27 Female Thread 0.5 GPM Spray Pattern Aerator	- - -	$13.80
CS-49005	Vandal-Resistant 13/16"-27 Male Thread 1.0 GPM Aerator	- - -	$10.60
CS-49007	Vandal-Resistant 13/16"-27 Male Thread 1.5 GPM Aerator	- - -	$9.50
CS-49008	Vandal-Resistant 55/64"-27 Female Thread 1.5 GPM Aerator	- - -	$7.30
CS-49009	13/16"-27 Male Thread 0.5 GPM Spray Pattern Aerator	- - -	$11.50
CS-49011	13/16"-27 Male Thread 1.0 GPM Aerator	- - -	$4.00
CS-49012	55/64"-27 Female Thread 1.0 GPM Aerator	- - -	$4.50
CS-49013	13/16"-27 Male Thread 1.5 GPM Aerator	- - -	$5.40
CS-49014	55/64"-27 Female Thread 1.5 GPM Aerator	- - -	$4.30
CS-49015	13/16"-27 Male-Thread Vandal-Proof 1.5 GPM Laminar Aerator	1	$7.90
CS-49016C	Repair Kit for New/Old Slow-Close – Cold	1	$39.10
CS-49016H	Repair Kit for New/Old Slow-Close – Hot	1	$39.10
CS-49016P	Repair Kit for New/Old Slow-Close – Plain	1	$39.10
CS-49017C	Repair Kit for New/Old Slow-Close Widespread Bathroom – Cold	1	$41.70
CS-49017H	Repair Kit for New/Old Slow-Close Widespread Bathroom – Hot	1	$40.50
CS-49018C	Handle Button – Cold	- - -	$2.30
CS-49018H	Handle Button – Hot	- - -	$2.30

Note: Order by number of packs required. Not by individual pieces.

PARTS

PART #	DESCRIPTION	PCS/ CS	LIST PRICE
CS-49019	Handle Screw	- - -	$1.00
CS-49020	Teflon Gasket	- - -	$2.30
CS-49026	POM Spring Support Packing	- - -	$4.40
CS-49027	POM Spring Support Packing for 1167/0031/0033 Series	- - -	$3.60
CS-49029	Full Flow Streamer – Female	- - -	$3.80
CS-49032	2 Copper Union Nuts & Sleeves	2	$16.50
CS-52001	Mounting Kit	- - -	$6.90
CS-53001	Mounting Kit for 2092	- - -	$5.10
CS-53002	Mounting Kit for 2093, 2094	- - -	$6.80
CS-53003	Mounting Tool for 2093/2094	- - -	$8.10
CS-53004	Mounting Kit for 2095	- - -	$10.10
CS-55004	Elbow Mounting Kit With 1/2" NPT Male Inlet & Outlet	- - -	$27.10
CS-63003	AC Power Adapter	- - -	$40.40
CS-63004	Control Module	1	$298.30
CS-63005	Brass Pop-up Drain Assembly	- - -	$43.60
G-1043	4-Arm Handle With Screw – Plain	1	$11.80
G-1043-C	Cylinder Sub-Unit With Gasket	1	$28.70
G-128-52	Screw	2	$2.30
G-1548-ET	Stem Extension With Screw	1	$34.90
G-1588-CT	Stem & Diverter Bonnet Group (K-3-DT)	1	$19.20
G-195-DST9	Ball-Lever Rod Group for 1109	1	$9.20
G-2090-S	Spout Shank Trim Group	1	$30.20
G-21	Rod & Knob With Cotter Pins	1	$10.20
G-2115-TP	Stopper for U-1109	1	$8.80
G-218-A	Strainer Group for 1555/1655	1	$16.50
G-284	Locknut & Washer Group	1	$12.50
G-285-AZ	Brass Soap Dish	1	$13.60
G-2887	Wall Bracket With Nipples & Wood Screws	1	$110.90
G-29-A	Flush Valve Group	1	$16.10
G-30-C	2 Copper Union Nuts & Sleeves	1	$14.60
G-3009-A	Strainer Group	1	$36.60
G-3036-A	Centralift Strainer Group	1	$66.10
G-3113-6	Showerhead, Arm (6") & Flanges	1	$32.90
G-3131	Wall Bracket Group	1	$75.40
G-3359-A	Strainer Plug	1	$16.00
G-392	Brass Cover Plate With Gasket for 0094	1	$20.40
G-398-C	Round Fluted Handle With Screw – Cold	1	$9.60
G-398-H	Round Fluted Handle With Screw – Hot	1	$9.60
G-4147-C	Wrist Handle (4") With Blue Index Ring & Screw – Cold	1	$35.00
G-4147-H	Wrist Handle (4") With Red Index Ring & Screw – Hot	1	$35.00

PART #	DESCRIPTION	PCS/ CS	LIST PRICE
G-4149-C	Wrist Handle (6") With Blue Index Ring & Screw – Cold	1	$37.70
G-4149-H	Wrist Handle (6") With Red Index Ring & Screw – Hot	1	$37.70
G-454-EL	Quick Pression 1/4 Turn Stem Assembly	1	$11.90
G-454-ER	Quick Pression 1/4 Turn Stem Assembly	1	$11.90
G-458-KL	Stem Assembly	1	$19.20
G-458-KR	Stem Assembly	1	$19.20
G-508-C	Large Canopy Handle With Screw – Cold	1	$13.10
G-508-D	Large Canopy Handle With Screw – Diverter	1	$13.10
G-508-H	Large Canopy Handle With Screw – Hot	1	$13.10
G-518-C	Tear-Drop Handle With Screw – Cold	1	$18.40
G-518-H	Tear-Drop Handle With Screw – Hot	1	$18.60
G-520-W	Lever Laundry Faucet Handles – Cold & Hot With Screws	1	$6.00
G-521-BWD	3-Point Lever Handle With Screw – Diverter	1	$9.90
G-523-C	Canopy Handle With Screw – Cold	1	$7.10
G-523-H	Canopy Handle With Screw – Hot	1	$7.10
G-5355-S	Rod Adjuster & Pin Group	1	$12.40
G-6928-V	Self-Closing 4-Arm Vandal-Proof Handle With Set Screw	1	$47.80
G-7114-V	Self-Closing Lever Vandal-Proof Handle With Screw	1	$47.90
G-7116-V	Self-Closing Lever Vandal-Proof Handle With Screw	1	$47.40
G-7233	Leg Mounting Group for 0468	1	$38.50
G-7237	Leg Mounting Group for 0470	1	$25.60
G-7237-477	Leg & Wall Bracket Group for 0477	1	$37.20
G-756-E	Regulator Stem With Washer for Restaurant Glass Filler for 0323	1	$3.10
G-83-ACZ	Faceplate for Lift & Turn or Chain With Stopper Bath Drains	1	$12.60
G-83-AZ	Faceplate for Trip Lever or Pop-Up Bath Drains	1	$24.30
G-913-A	Coupling Nuts & Washers – 2 Sets (Thinner Crowfoot Washer)	1	$7.70
G-914-SA	Coupling Nuts & Washers – 2 Sets (Thicker Crowfoot Washer)	1	$8.30
G-94-F	Knob & Screw for Lift & Turn Bath Drains	1	$3.10
G-95-A	Coupling Nuts & Washer – 1 Set (Thinner Crowfoot Washer)	1	$4.00
G-97	Locknut Group – 2/pk	1	$3.50
K-2-CT	Stem Assembly With Replaceable Seat – Old Style	1	$36.80
K-2-DT	Diverter Stem Assembly With Replaceable Seat – Old Style	1	$65.30
K-3-CT	Stem Assembly With Replaceable Seat	1	$24.50

Note: Order by number of packs required. Not by individual pieces.

PARTS

	PART #	DESCRIPTION	PCS/ CS	LIST PRICE
	K-3-DT	Diverter Stem Assembly With Replaceable Seat	1	$25.30
	K-351-C	Ceramic Stem Assembly	1	$45.20
	K-351-H	Ceramic Stem Assembly	1	$45.20
	K-352-C	Ceramic Stem Assembly	1	$35.40
	K-352-H	Ceramic Stem Assembly	1	$35.40
	K-361	Stem Assembly for Drinking Faucets (0360/0361/0362)	1	$44.20
	K-454-C	Quick Pression 1/4 Turn Stem Assembly With Replaceable Seat – Cold	1	$13.80
	K-454-H	Quick Pression 1/4 Turn Stem Assembly With Replaceable Seat – Hot	1	$13.80
	PF-1043-A	Push-Button Cap for Glass Filler	1	$4.00
	PF-1090-J	Regulator Cap for Glass Filler for 0323	1	$4.00
	PF-161-D	Flange for Bubbler Head	1	$9.70
	PF-177-G	Hose Push-On Spout for Leg-Tub Faucet	1	$9.90
	PF-218-A	Brass Strainer Body for 1555/1655/1685	1	$15.00
	PF-259-X	Brass Soap Dish	1	$15.70
	PF-263-D	Seat for Widespread Series	1	$11.70
	PF-3359-A	Brass Drain Plug for Bath Drains	1	$11.20
	PF-358-Q	Cap Button for Bubbler Head	1	$4.90
	PF-358-RS	Cap Nut for Bubbler Head	1	$11.50
	PF-398-B8	Brass Bowl for Drinking Fountain	1	$94.60
	PF-5075-YP	Nut for Standpipe	1	$6.80
	PF-6928-P	Self-Closing 4-Arm Handle	1	$43.70
	PF-6930	Hex-Cap Nut for Glass Filler for 0393	1	$20.70
	PF-7114-P	Self-Closing Lever Handle	1	$44.80
	PF-7114-PS	Self-Closing Lever Handle With Hole for Chain & Ring	1	$49.30
	PF-7125	Brass Cap for Self-Closing – Plain	1	$11.40
	PF-7125-C	Brass Cap for Self-Closing – Cold	1	$11.40
	PF-7125-H	Brass Cap for Self-Closing – Hot	1	$10.60
	PF-714-RT	Brass Shower Riser 22-1/2" for Exposed Shower	1	$176.70
	PF-725-A	4" Gooseneck Spout for Leg-Tub Faucet	1	$55.10
	PF-731-G	3" Tailpiece for Bath Drain	1	$10.70
	PF-741-DO	Spout Adapter for Bar Faucet	1	$8.90
	PF-752-T	2-1/2" Gooseneck Spout for Glass Filler	1	$39.20
	PF-768-D	Bubbler Cap for Drinking Fountain	1	$8.80
	PF-776-D	Bubbler Shank for Drinking Fountain	1	$11.80
	SU-1043-S	Push Valve Stem With Diaphragm for Glass Filler	1	$10.80
	SU-1109	Pop-Up Drain Less Pull Rod Ball Lever Rod & Bracket	1	$43.60
	SU-1548-605	Stem Assembly	1	$23.90
	SU-157-DA	4-3/16" Rigid Gooseneck Spout With Aerator	1	$49.20

	PART #	DESCRIPTION	PCS/ CS	LIST PRICE
	SU-157-G	3-15/16" Rigid Gooseneck Spout With Streamformer	1	$50.60
	SU-157-GLA	3-15/16" Rigid Gooseneck Spout With Aerator	1	$59.40
	SU-157-HA	4-11/16" Rigid Gooseneck Spout With Aerator	1	$64.30
	SU-157-JA	4-15/16" Rigid Gooseneck Spout With Aerator	1	$68.80
	SU-157-KRA	5-1/2" Rigid Gooseneck Spout With Aerator	1	$90.90
	SU-157-KSA	5-1/2" Swivel Gooseneck Spout With Aerator	1	$94.10
	SU-1839-P	Stem Assembly	1	$23.70
	SU-1855-47RPRC	Stem Assembly	1	$15.30
	SU-2090-A	4-1/2" Blendo Widespread Spout With Aerator	1	$133.80
	SU-2090-AB	4-1/2" Blendo Widespread Spout With Aerator, No Pull Rod Hole	1	$133.30
	SU-2136-FA	Slant-Back Spout With Aerator for 1178	1	$80.50
	SU-257-JSA	6-3/8" Swivel Tri-Arc Gooseneck Spout With Aerator for PF-1012-J	1	$143.30
	SU-2806	Female Flange, Adjustable 6-1/2" to 9-1/2"	1	$55.50
	SU-2807	Female Flange, Adjustable 7-7/8" to 8-1/8"	1	$37.70
	SU-2841-ARC	Female Flange, Adjustable 3" to 13" With Integral Stops	1	$89.20
	SU-2841-S	Female Flange, Adjustable 2-1/2" to 8-1/2"	1	$117.50
	SU-2846	Male Flange, Adjustable 7-7/8" to 8-1/8"	1	$42.60
	SU-2923-A	5" Swivel Cast Brass Spout With Aerator	1	$76.40
	SU-2924-A	6" Swivel Tube Spout With Aerator	1	$29.20
	SU-2924-H-01	6" Swivel Tube Spout With Hose-End – Rough Brass	1	$23.90
	SU-2924-H-02	6" Swivel Tube Spout With Hose-End – PVD Polished Chrome	1	$29.50
	SU-2929-01	6" Swivel Cast-Brass Spout With Hose End – Rough Brass	1	$40.00
	SU-2987-DA	Guide for Hose & Spray	1	$8.30
	SU-3026-B	Drain Shoe & Tube	1	$45.10
	SU-3026-CDL	Drain Shoe & Tube Without Strainer Body	1	$25.90
	SU-3130-M	Wall Bracket Rod & Pin Group for Service Sink Faucet	1	$65.70
	SU-3359-A	Strainer-Plug Assembly With Plug Guide & Rocker Arm for Bath Drain	1	$34.00
	SU-357-HSA	7-1/4" Reach, High-Rise Swivel Spout With Aerator	1	$123.80
	SU-357-WSA	8-3/4" Swivel High-Rise Spout With Aerator	1	$114.10
	SU-358-SA	Jet Assembly for Bubbler Head	1	$10.70
	SU-363-JA	10" Swivel Tube Spout With Aerator	1	$40.60
	SU-363-JH	10" Swivel Tube Spout With Hose End	1	$42.70
	SU-363-LA	12" Swivel Tube Spout With Aerator	1	$44.80

Note: Order by number of packs required. Not by individual pieces.

PARTS

	PART # DESCRIPTION	PCS/ CS	LIST PRICE
SU-363-LH	12” Swivel Tube Spout With Hose End	1	$46.10
SU-363-MA	14” Swivel Tube Spout With Aerator	1	$45.50
SU-363-MH	14” Swivel Tube Spout With Hose End	1	$47.20
SU-363-RA	8” Swivel Tube Spout With Aerator	1	$31.60
SU-363-RH	8” Swivel Tube Spout With Hose End	1	$33.40
SU-365-CA	8” Swivel D-Style Spout With Aerator	1	$55.50
SU-365-CH	8” Swivel D-Style Spout With Hose End	1	$58.80
SU-511-A	1-11/16” Shelf-Back Spout With Aerator	1	$31.60
SU-61-LC	5-3/8” Linkage	1	$8.90
SU-61-LCPP	5-3/8” Linkage With Plunger for 1555	1	$18.80
SU-61-LDP	6-3/16” Linkage With Plunger for 1655/1655X	1	$35.20
SU-61-LEP	Linkage for 1655-X1817 Bath Drain	1	$34.70
SU-6965	Bubbler Body for 0364-L/0365-L/0366-L	1	$74.70
SU-7071	Bubbler Body for 0366-HX8/0366-HX8WB	1	$135.70
SU-7101-AF	Self-Closing Stem Assembly	1	$11.60
SU-756-CB	Post With Pin for Bath Drain	1	$5.60
SU-767	Supply Tube for Bar Faucet	1	$16.80
SU-83-AZ	Trip-Lever Faceplate	1	$17.40
SU-85-APF	Rocker-Arm Assembly With Flat Platform End	1	$14.30
SU-85-FA	8-3/4” Linkage With Spring for 1676 Series	1	$16.60
SU-85-K	13-3/4” Linkage With Spring for 1675 Series	1	$15.40
SU-85-KM	6-1/2” Linkage With Spring for 1674 Series	1	$15.50
SU-85-U	Clevis Assembly	1	$6.10
U-1615-50RC	2-1/2” Rigid Spout With Hose End & Vacuum Breaker	1	$116.50
U-1615-54-04	Rigid Spout With Hose End & Vacuum Breaker Including Adjuster Rod & Pin	1	$146.80
U-2170-AL	Hot Corner Valve Body for Shelf-Back Bathroom Faucet	1	$67.00
U-2170-AR	Cold Corner Valve Body for Shelf-Back Bathroom Faucet	1	$67.00
U-2171-A	6” Center Tee With Rocker Arm for Shelf-Back/Slant-Back Bathroom Faucet	1	$41.50
X1009-A	Spring for Self-Closing Stem Assembly – 2/pk	2	$13.20
X1028-Y	Nylon Gasket – 25/pk	25	$3.10
X103-HS	Set Screw 3/16” Long 10-32 – 6/pk	6	$2.30
X103-HSSS	Set Screw 1/18” Long – 6/pk	6	$2.30
X103-PLCP	Flat-Head Knob Screw – Phillips – 6/pk	6	$3.40
X1038-453	O-Ring for Stem Assembly – 25/pk	25	$4.80
X1038-IN	O-Ring for Shelf-Back/Slant-Back Faucet Center Tee Use – 10/pk	10	$4.30

	PART # DESCRIPTION	PCS/ CS	LIST PRICE
X1038-KN	O-Ring Epdm Rubber – 25/pk	25	$8.50
X1038-S	O-Ring – 2/pk	2	$1.90
X1038-W	O-Ring Buna N – 10/pk	10	$4.50
X104	Round-Head Seat Washer Screw – 25/pk	25	$3.80
X1043-B	Brass Washer – 6/pk	6	$4.80
X1043-FN	Nylon Washer – 2/pk	2	$1.90
X1043-T	Brass Washer for Standpipe – 6/pk	6	$2.80
X105	Round-Head Seat Washer Screw Slotted – 25/pk	25	$3.60
X105-H	Round-Head Screw Slotted – 6/pk	6	$3.60
X107-F	Oval Head Handle Screw – Phillips – 25/pk	25	$5.70
X107-FB	Color Code Index Ring – Blue – 5/pk	5	$3.80
X107-FR	Color Code Index Ring – Red – 5/pk	5	$3.60
X107-H	Oval Head Screw for 398/518 Handle – Phillips – 6/pk	6	$3.60
X1081-N	Brass Hex Nut – 10/pk	10	$2.40
X113-P	Hex-Head Pop-Up Bracket Screw – 6/pk	6	$1.20
X126-S	Truss-Head Screw – 6/pk	6	$1.00
X127-AP21/4	Faceplate Screw for Bath Drain – Phillips – 6/pk	6	$8.20
X1549	Stem Bonnet for K-2-CT – 2/pk	2	$22.90
X165	Brass Seat for K-2-CT – 10/pk	10	$15.60
X165-6500	Brass Seat – 2/pk	2	$6.30
X166-FN	Snap Ring for Spout – 6/pk	6	$1.30
X166-Q	Snap Ring for CentraLift Bath Drain – 6/pk	6	$2.40
X168-B	Hex Nut – 4/pk	4	$3.60
X1875	1/2” IP Union Inlets for Rough Brass Faucet Only – 2/pk	2	$7.60
X1875-C	1/2” Copper Sweat Union Inlets for Rough Brass Faucet Only – 2/pk	2	$7.10
X1876-BB	Coupling Nut for Rough Brass Faucet Only – 2/pk	2	$10.70
X193-LBN	Nylon Gasket for Shelf-Back/Slant-Back Stem Assembly – 6/pk	6	$1.90
X194	Cotter Pin for Shelf-Back/Slant-Back Faucet Rocker Arm Assembly – 6/pk	6	$1.20
X195-C	Clip for Pop-Up Pull Rod – 6/pk	6	$2.60
X207-B	Brass Hex Nut for Bath Drain – 6/pk	6	$3.00
X2133-210	Brass Flange for Leg-Tub Faucet – 2/pk	2	$57.80
X218-B	Strainer Plate for 1555/1655 – 10/pk	10	$8.20
X218-C	Oval Head Brass Strainer Plate Screw – 10/pk	10	$5.10
X218-F	Strainer Plate for 1665-X – 2/pk	2	$8.20
X22	Brass Washer – 6/pk	6	$2.40
X222-D	Cotter Pin for Trip-Lever Faceplate – 6/pk	6	$2.40
X263-BC	Seat – 10/pk	10	$15.80

Note: Order by number of packs required. Not by individual pieces.

PARTS

	PART #	DESCRIPTION	PCS/ CS	LIST PRICE
	X269-29/16	2-9/16" Brass Nipple – 10/pk	10	$33.60
	X279-D	Brass Washer – 10/pk	10	$3.00
	X279-E	Brass Washer – 10/pk	10	$4.80
	X279-L	Brass Washer – 10/pk	10	$2.10
	X279-V	Spring – 10/pk	10	$3.60
	X28-A	Brass Washer for Widespread Spout With Hole – 6/pk	6	$2.70
	X3	Brass Washer – 6/pk	6	$4.80
	X3008-X	Brass Coupling Nut – 2/pk	2	$7.10
	X33-A	Brass Washer – 6/pk	6	$2.60
	X358-U	Fiber Washer – 10/pk	10	$2.00
	X358-V	Monel Screen – 10/pk	10	$5.40
	X4	Brass Packing Washer – 6/pk	6	$5.10
	X4-L	Brass Packing Washer – 6/pk	6	$2.40
	X4-MA	Nylon Washer – 6/pk	6	$2.60
	X4-N	Celcon Washer for Diverter Stem – 6/pk	6	$2.00
	X4015	Brass Coupling Nut – 4/pk	- - -	$7.00
	X402-A	Fiber Washer for Stem – 25/pk	25	$2.60
	X402-B	Nylon Washer for Self-Closing Stem Assembly – 12/pk	12	$4.80
	X4079-3/8	Locknut for 0425 Push-Button Gravity Faucet – 4/pk	1	$13.50
	X409-PT	Ball-Lever Packing for Pop-Up – 12/pk	12	$5.10
	X42	Klingersil Gasket – 6/pk	6	$4.40
	X420-N	Nylon Washer – 12/pk	12	$2.40
	X427-WS	Gasket for Widespread Spout With Hole – 12/pk	12	$8.80
	X433-AN	Nylon Gasket for Self-Closing Stem Assembly – 12/pk	12	$7.60
	X491-S	Klingersil Gasket – 12/pk	12	$12.40
	X53-AS	Zinc Die-Cast Locknut – 6/pk	6	$8.80
	X53-AZ	Zinc Locknut – 6/pk	6	$8.30
	X53-CZ	Zinc Die-Cast Locknut – 6/pk	6	$8.40
	X54	Thinner Crowfoot Steel Washer – 10/pk	10	$3.70
	X68-HX	Brass Nut for Slow-Close/Self-Closing Handle – 10/pk	10	$10.10
	X69-C	Celcon Sleeve for Slow-Close & Self-Closing Handles – 10/pk	10	$3.80
	X70-WA	Brass Hole Button for Items Without Pop-Up Drain – 6/pk	6	$7.50
	X700-KT	Brass Nipple for 0425 Push Button Gravity Faucet Only – 2/pk	2	$15.70
	X71	Brass Ball Retainer – 2/pk	2	$16.10
	X7133-AZ	Zinc Die-Cast Locknut – 10/pk	10	$8.40
	X765-TA	Brass Hex Packing Nut for Stem Assembly – 6/pk	6	$10.70
	X809	Packing #52AFT Material – 10/pk	10	$3.10

	PART #	DESCRIPTION	PCS/ CS	LIST PRICE
	X814-BARP	Rubber Packing – 10/pk	10	$12.00
	X82-J	Brass Packing Washer for Stem Assembly – 6/pk	6	$2.30
	X848-B	Felt Packing – 10/pk	10	$4.00
	X85-U	2-11/16" Brass Eyebolt for Bath Drain Linkage & Plunger – 2/pk	2	$2.30
	X901-WNN	Seat Washer – 25/pk	25	$4.30
	X904-N	Buna Seat Washer for Self-Closing Stem Assembly – 6/pk	6	$2.10
	X913-N	Acrylonitrile Seat Washer – 10/pk	10	$2.60
	X936-A	Rubber Washer for Standpipe – 6/pk	6	$5.30
	X940	Rubber Washer for Bubbler Head – 10/pk	10	$3.70
	X940-TRN	Santoprene Washer – 10/pk	10	$4.40
	X944-N	Santoprene Washer – 2/pk	2	$1.70
	X945	Rubber Seat Washer – 2/pk	2	$4.20
	X947-C	Rubber Washer – 10/pk	10	$4.80
	X954-AN	Slip Joint Rubber Washer – 10/pk	10	$2.50
	X977	Packing – 10/pk	10	$5.20
	X991	Rubber Washer for Centralift Lift & Turn Bath Drain – 4/pk	4	$3.70
	X991-A	Rubber Washer – 4/pk	4	$8.00
	X991-C	Rubber Washer for Trip-Lever Bath Drain – 4/pk	4	$4.40
	XCS-42021	Friction Brass Washer – 6/pk	- - -	$7.70
	XCS-42022	Body Adapter Washer – 10/pk	- - -	$3.00
	XCS-42023	Hose-Adapter Washer – 10/pk	- - -	$5.60
	XCS-42025	Hose Washer – 10/pk	- - -	$5.60
	XCS-42029	15 mm Check Valve – 5/pk	- - -	$22.30
	XCS-44002	2-9/16" Cuttable Brass Nipple – 10/pk	10	$44.60
	XCS-45004	Retaining Ring – 2/pk	- - -	$5.90
	XCS-45005	Retainer Nut – 2/pk	- - -	$3.00
	XCS-45006	Gasket – 5/pk	- - -	$1.20
	XCS-45007	O-Ring – 5/pk	- - -	$1.20
	XCS-47001	10 mm Check Valve – 5/pk	- - -	$17.80
	XCS-49001	3/32" Allen Screw – 10/pk	- - -	$1.20
	XCS-49002	Red/Blue Indicator – 10/Pk	- - -	$2.40
	XCS-49033	1/8" Allen Screw – 10/pk	- - -	$3.40
	XCS-53005	Mounting Screws for Control Module – 4 Pairs	- - -	$2.40
	XG-1867-ALCP	Wheel Handle With X126-S Screw Chrome Plated – 2/pk	2	$20.60
	XPF-166-U	Spout-End Aerator Adapter – 2/pk	2	$8.30
	XPF-263-B	Brass Seat CP – 4/pk	4	$6.00
	XPF-263-C	Brass Seat RC – 2/pk	2	$7.30
	XPF-460	Brass Cap Nut – 2/pk	2	$8.20
	XPF-59	Brass Seat RC – 10/pk	10	$15.40

Note: Order by number of packs required. Not by individual pieces.

PARTS

	PART #	DESCRIPTION	PCS/ CS	LIST PRICE
	XPF-67-AC	Celcon Samson Nut for Self-Closing Handles – 10/pk	10	$6.00
	XPF-782-D	Brass Spout Nut RC – 2/pk	2	$7.20
	XPF-784-C	Spout-Hose End Adapter CP – 2/pk	2	$7.20
	XSU-1548-BSP	Stem Assembly for Wash Machine Filler & Shower Valve – 2/pk	2	$40.90
	XSU-1858-A	Stem Assembly for Single-Basin Faucet (0239) – 2/pk	2	$25.00
	XSU-233-B	Chain & Ring for 0335-1/2 Self-Closing Shower Stop – 2/pk	2	$14.50

Note: Order by number of packs required. Not by individual pieces.

TERMS & CONDITIONS

PAYMENT TERMS

This price book has been prepared for the convenience of Central Brass' distributors and their customers and supersedes all previous Central Brass price schedules. The prices shown are the basis for distributor discounts and are not intended as resale prices. Possession of this price book by any person is not an offer to sell them, or anyone else, the goods listed herein at the prices shown.

SALES TAX

All merchandise is sold to customers for resale. Customers assume full responsibility for all taxes or other assessments imposed by any government agency. All customers must furnish a valid resale or tax exemption number.

RETURNED GOODS

Product MAY NOT be returned without prior inspection and written authorization from a Central Brass representative. An approved Returned Goods Authorization must accompany all returns. A handling charge of 50% will be assessed against any returned product without prior authorization. Credits will be issued based on the established purchase price less any applicable transportation, handling and restocking charges. Returns of discontinued products or products determined to be in non-resalable condition are not accepted and will be issued credit at scrap value only. Credits must be taken within six months of date of issue.

CLAIMS

Claims for shortage of goods must be presented within 5 days from the date of receipt of shipment and must state the packing slip number applicable to the claim. Any claim not so presented will be conclusively deemed waived.

WARRANTY

Central Brass products are warranted to the original consumer purchaser. Please refer to the warranty enclosed with each Central Brass product for specific details. Additional copies are available upon request.

SALES POLICY

All prices within this catalog are subject to change without notice. Goods which differ in any material respect, such as size or finish, from the goods as illustrated and described in Seller's literature are subject to special prices. Central Brass may, at its discretion, discontinue, modify or change any product listed in its catalog without prior notice.

OLYMPIA®

PIONEER®

CENTRAL BRASS®

PIONEER INDUSTRIES
3325 Garfield Avenue
Commerce, CA 90040

sales@pioneerind.com
800.338.9468
fax: 323.888.9515

pioneerind.com
olympiafaucets.com
centralbrass.com

LT-23-PPB-01